Dataflow Analysis

Program optimizations

- So far we have talked about different kinds of optimizations
  - Peephole optimizations
  - Local common sub-expression elimination
  - Loop optimizations
- What about *global optimizations*
  - Optimizations across multiple basic blocks (usually a whole procedure)
    - Not just a single loop

Useful optimizations

- Common subexpression elimination (global)
  - Need to know which expressions are available at a point
- Dead code elimination
  - Need to know if the effects of a piece of code are never needed, or if code cannot be reached
- Constant folding
  - Need to know if variable has a constant value
- Loop invariant code motion
  - Need to know where and when variables are live
- So how do we get this information?

Dataflow analysis

- Framework for doing compiler analyses to drive optimization
- Works across basic blocks
- Examples
  - Constant propagation: determine which variables are constant
  - Liveness analysis: determine which variables are live
  - Available expressions: determine which expressions are have valid computed values
  - Reaching definitions: determine which definitions could "reach" a use

Example: constant propagation

- Goal: determine when variables take on constant values
- Why? Can enable many optimizations
  - Constant folding

```
x = 1;
y = x + 2;
if (x > z) then y = 5
... y ...
```

  - Create dead code

```
x = 1;
y = x + 2;
if (y > x) then y = 5
... y ...
```

Example: constant propagation

- Goal: determine when variables take on constant values
- Why? Can enable many optimizations
  - Constant folding

```
x = 1;
y = x + 2;
if (x > z) then y = 5
... y ...
```

```
x = 1;
y = 3;
if (x > z) then y = 5
... y ...
```

  - Create dead code

```
x = 1;
y = x + 2;
if (y > x) then y = 5
... y ...
```

Example: constant propagation

- Goal: determine when variables take on constant values
- Why? Can enable many optimizations
  - Constant folding

```
x = 1;
y = x + 2;
if (x > z) then y = 5
... y ...
```

```
x = 1;
y = 3;
if (x > z) then y = 5
... y ...
```

  - Create dead code

```
x = 1;
y = x + 2;
if (y > x) then y = 5
... y ...
```

```
x = 1;
y = 3; //dead code
if (true) then y = 5 //simplify!
... y ...
```

How can we find constants?

- Ideal: run program and see which variables are constant
  - Problem: variables can be constant with some inputs, not others – need an approach that works for all inputs!
  - Problem: program can run forever (infinite loops?) – need an approach that we know will finish
- Idea: run program *symbolically*
  - Essentially, keep track of whether a variable is constant or not constant (but nothing else)

Overview of algorithm

- Build control flow graph
  - We'll use statement-level CFG (with merge nodes) for this
- Perform symbolic evaluation
  - Keep track of whether variables are constant or not
- Replace constant-valued variable uses with their values, try to simplify expressions and control flow

Build CFG

```
x = 1;
y = x + 2;
if (y > x) then y = 5;
... y ...
```

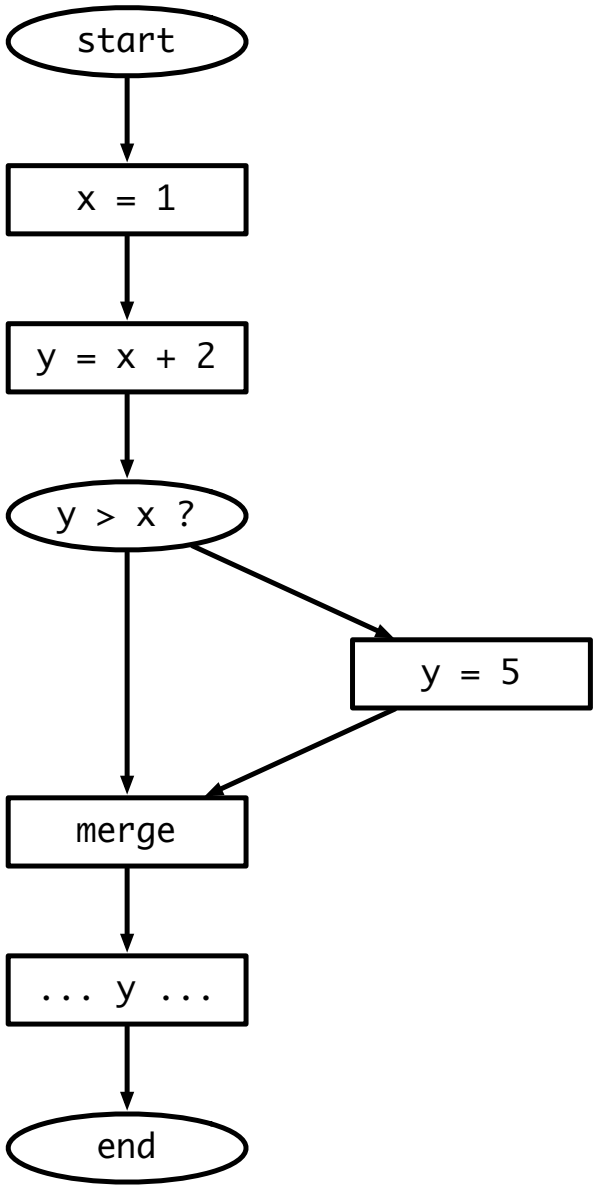

Symbolic evaluation

- Idea: replace each value with a symbolic
  - constant (specify which), maybe constant, definitely not constant
- Can organize these possible values in a *lattice* (will formalize this later)

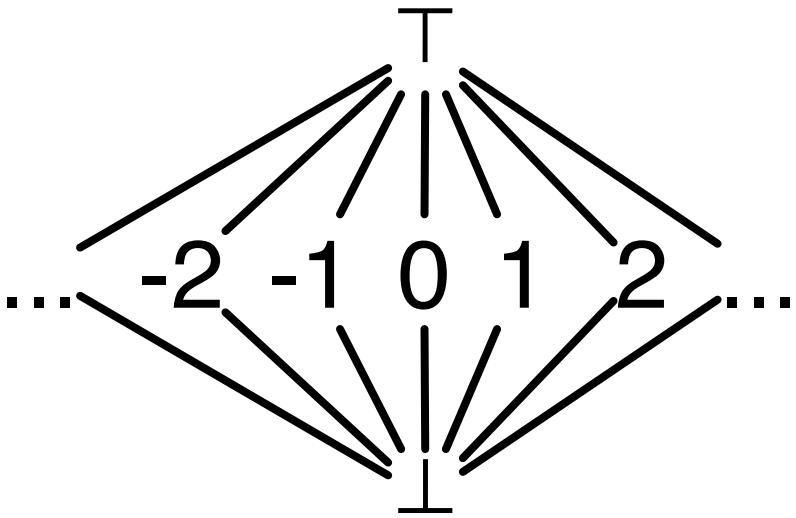

Symbolic evaluation

- Evaluate expressions symbolically: eval(e, V_{in})
  - If e evaluates to a constant, return that value. If any input is $\top$ (or $\bot$), return $\top$ (or $\bot$)
    - Why?
- Two special operations on lattice
  - meet(a, b) – highest value less than or equal to both a and b
  - join(a, b) – lowest value greater than or equal to both a and b

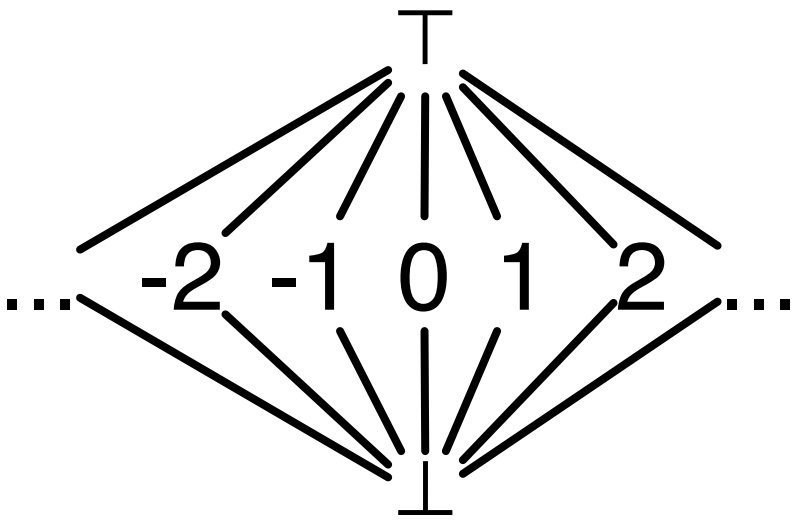

Join often written as a ⊔ b

Meet often written as a ⊓ b

Putting it together

- Keep track of the symbolic value of a variable at every program point (on every CFG edge)
  - State vector
- What should our initial value be?
  - Starting state vector is all ⊤
    - Can't make any assumptions about inputs – must assume not constant
  - Everything else starts as ⊥, since we don't know if the variable is constant or not at that point

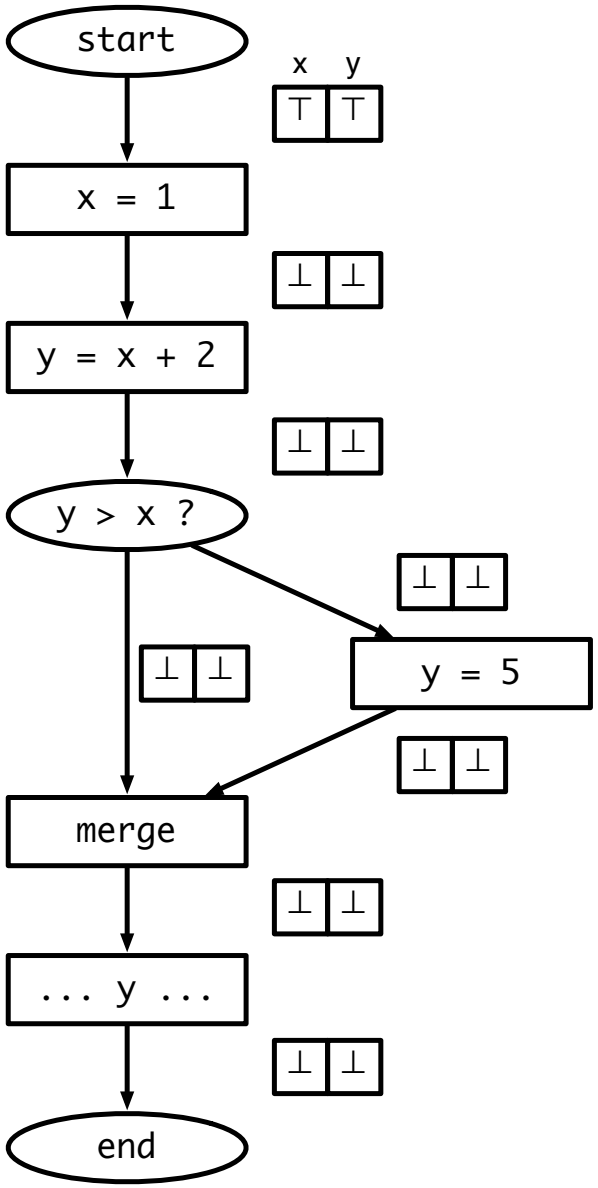

Executing symbolically

- For each statement `t = e` evaluate `e` using V_{in}, update value for `t` and propagate state vector to next statement
- What about switches?
  - If `e` is true or false, propagate V_{in} to appropriate branch
  - What if we can't tell?
    - Propagate V_{in} to both branches, and symbolically execute both sides
- What do we do at merges?

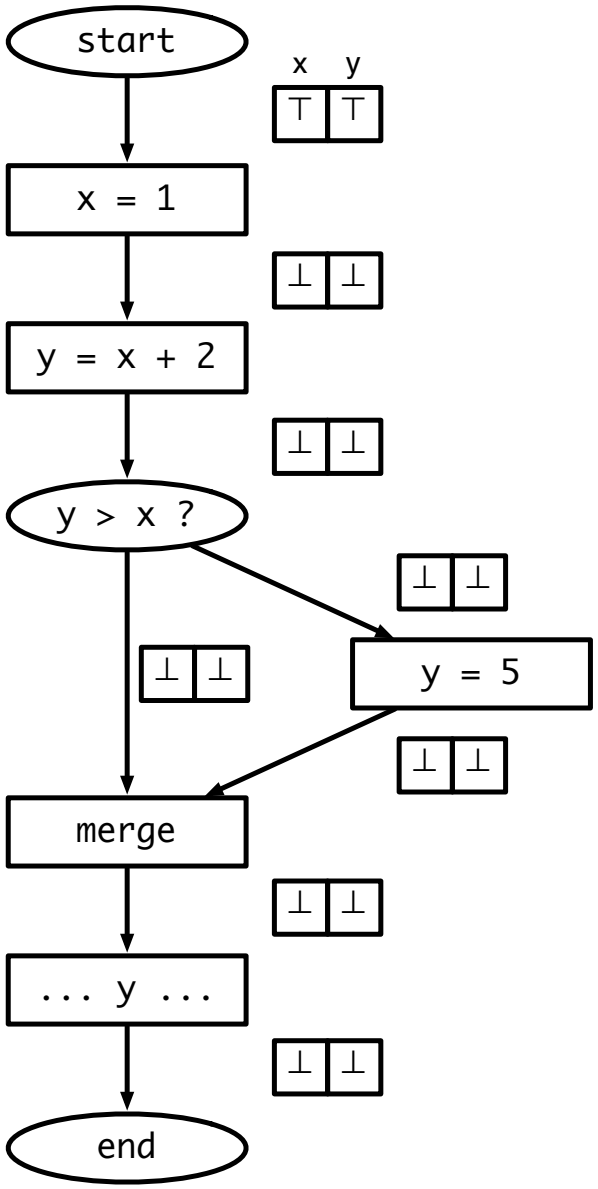

Handling merges

- Have two different V_{in}s coming from two different paths
- Goal: want new value for V_{in} to be *safe* (shouldn't generate wrong information), and we don't know which path we actually took
- Consider a single variable. Several situations:
  - $V_1 = \bot, V_2 = * \rightarrow V_{out} = *$
  - V_1 = constant x, V_2 = x $\rightarrow V_{out}$ = x
  - V_1 = constant x, V_2 = constant y $\rightarrow V_{out} = \top$
  - $V_1 = \top, V_2 = * \rightarrow V_{out} = \top$
- Generalization:
  - $V_{out} = V_1 \sqcup V_2$

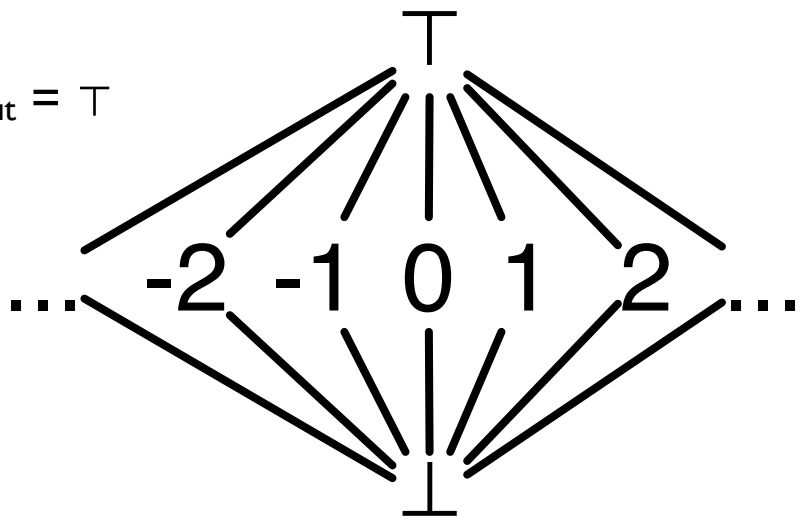

Result: worklist algorithm

- Associate state vector with each edge of CFG, initialize all values to ⊥, worklist has just start edge
  - While worklist not empty, do:

```
Process the next edge from worklist

Symbolically evaluate target node of edge using input state vector

If target node is assignment (x = e), propagate Vin[eval(e)/x] to
output edge

If target node is branch (e?)

   If eval(e) is true or false, propagate Vin to appropriate
   output edge

   Else, propagate Vin along both output edges

If target node is merge, propagate join(all Vin) to output edge

If any output edge state vector has changed, add it to worklist
```

Running example

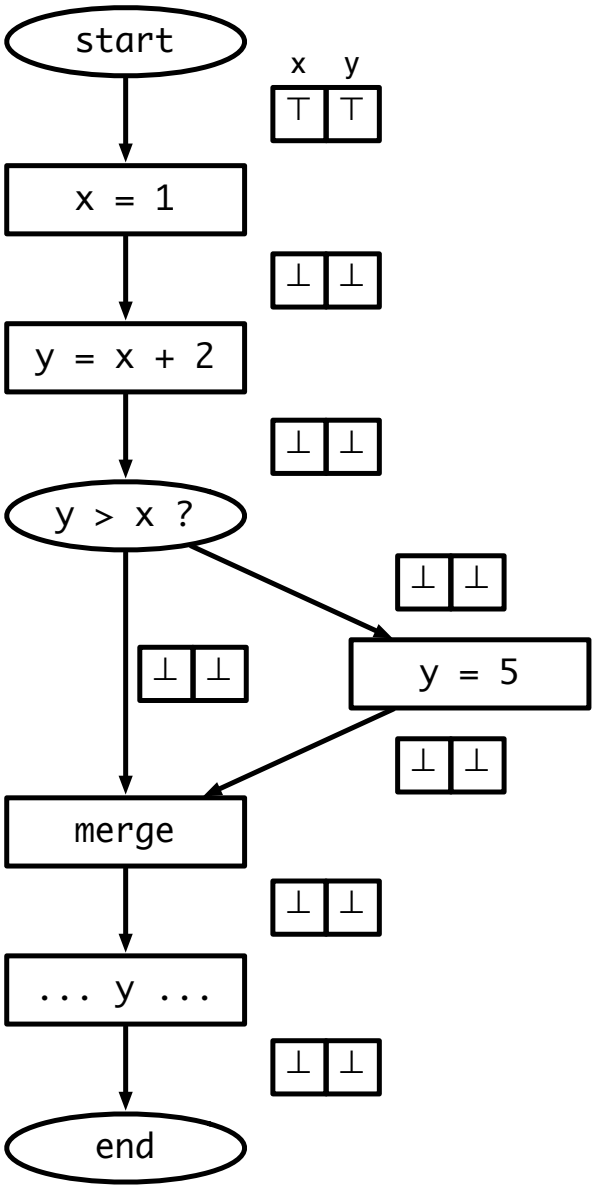

Running example

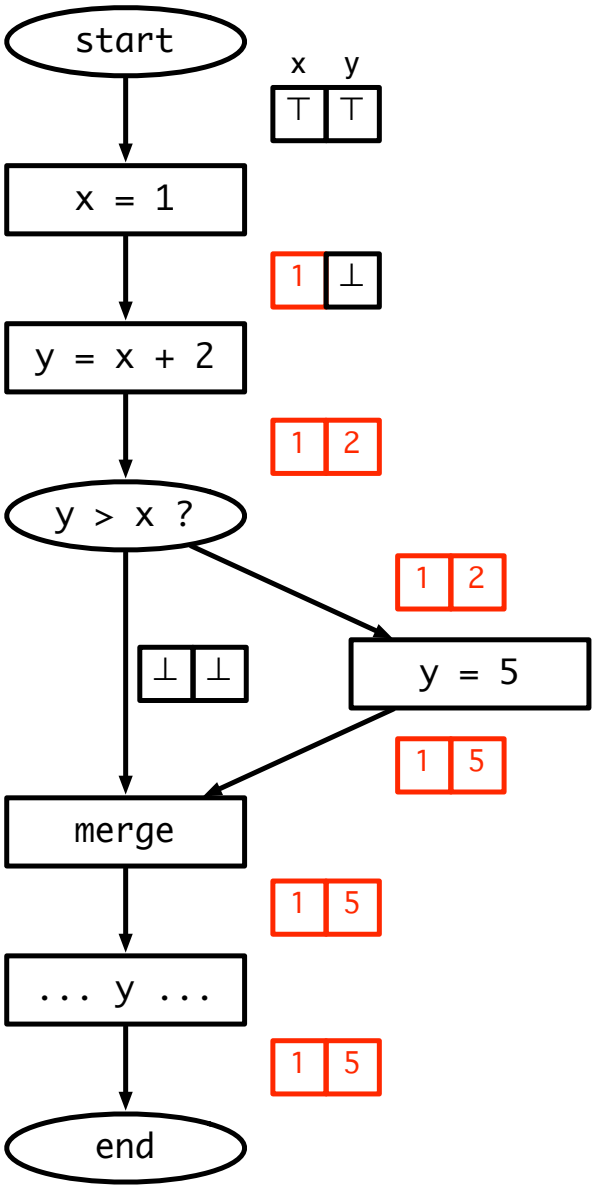

What do we do about loops?

- Unless a loop never executes, symbolic execution looks like it will keep going around to the same nodes over and over again
- Insight: if the input state vector(s) for a node don't change, then its output doesn't change
  - If input stops changing, then we are done!
- Claim: input will eventually stop changing. Why?

Loop example

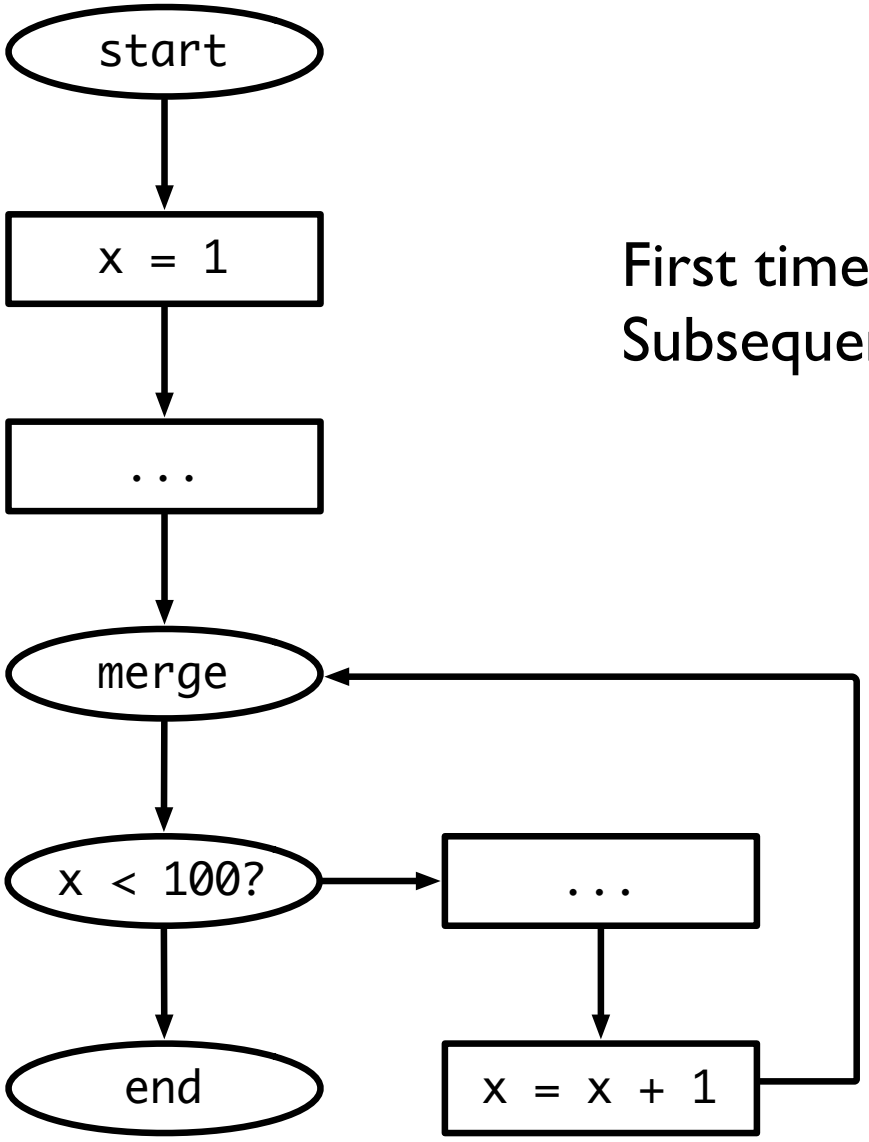

First time through loop, x = 1
Subsequent times, x = ⊤

Complexity of algorithm

- V = # of variables, E = # of edges
- Height of lattice = 2 → each state vector can be updated at most 2 *V times.
- So each edge is processed at most 2 *V times, so we process at most 2 * E *V elements in the worklist.
- Cost to process a node: O(V)
- Overall, algorithm takes $O(EV^2)$ time

Question

- Can we generalize this algorithm and use it for more analyses?
- First, let's lay the theoretical foundation for dataflow analysis.

Lattice Theory

First, something interesting

- Brouwer Fixpoint Theorem
  - Every continuous function f from a closed disk into itself has at least one fixed point
- More formally:
  - Domain D: a *convex, closed, bounded* subspace in a plane (generalizes to higher dimensions)
  - Function $f : D \rightarrow D$
  - There exists some x such that $f(x) = x$

Intuition

- Consider the one-dimensional case: mapping a line segment onto itself
- $x \in [0, 1]$
- $f(x) \in [0, 1]$
- There must exist some x for which $f(x) = x$
- Examples (in 2D)
  - A mall directory
  - Crumpling up a piece of graph paper

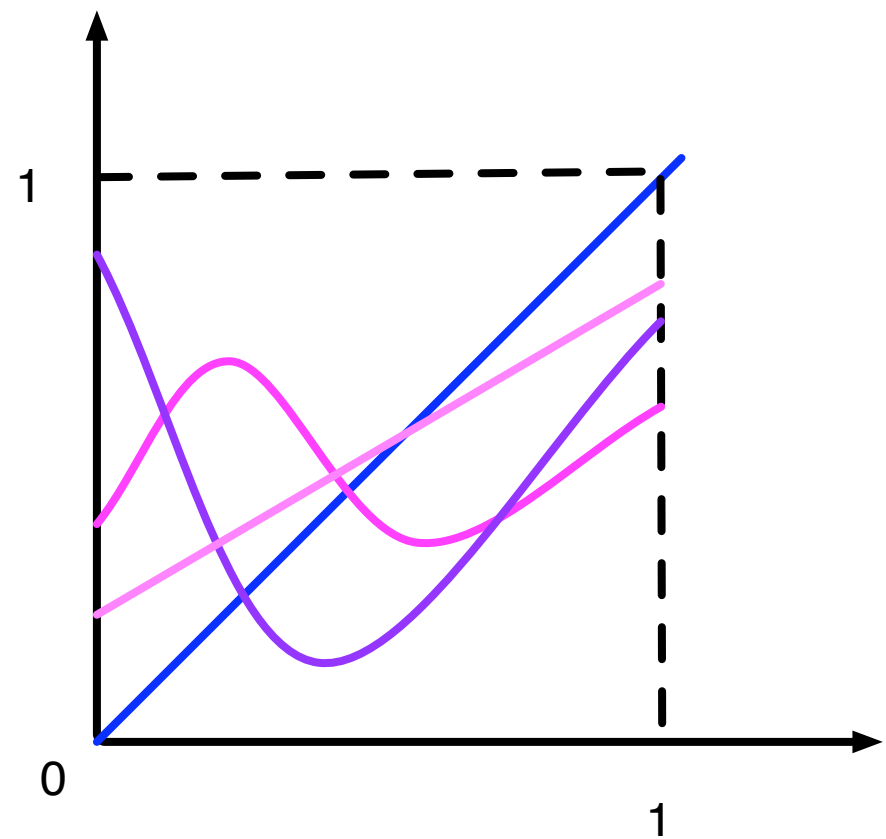

Back to dataflow

- Game plan:
  - Finite partially ordered set with least element: D
  - Function $f : D \rightarrow D$
  - Monotonic function $f : D \rightarrow D$
  - $\exists$ fixpoint of f
    - $\exists$ *least* fixpoint of f
  - Generalization to case when D has a greatest element, $\top$
    - $\exists$ *greatest* fixpoint of f
  - Generalization to systems of equations

Partially ordered set (poset)

- Set *D* with a relation $\sqsubseteq$ that is
  - Reflexive: $x \sqsubseteq x$
  - Anti-symmetric: $x \sqsubseteq y$ and $y \sqsubseteq x \Rightarrow y = x$
  - Transitive: $x \sqsubseteq y, y \sqsubseteq z \Rightarrow x \sqsubseteq z$
- Example: set of integers and $\leq$
- Graphical representation of poset
  - Graph in which nodes are elements of *D* and relation $\sqsubseteq$ is indicated by arrows
  - Usually omit reflexive and transitive arrows for legibility
  - Not counting reflexive edges, graph is always a DAG (why?)

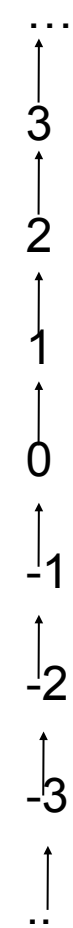

Another example

- Powerset of any set, ordered by $\subseteq$ is a poset
- In the example, poset elements are {}, {a}, {a, b}, {a, b, c}, etc.
- $X \sqsubseteq Y$ iff $X \subseteq Y$

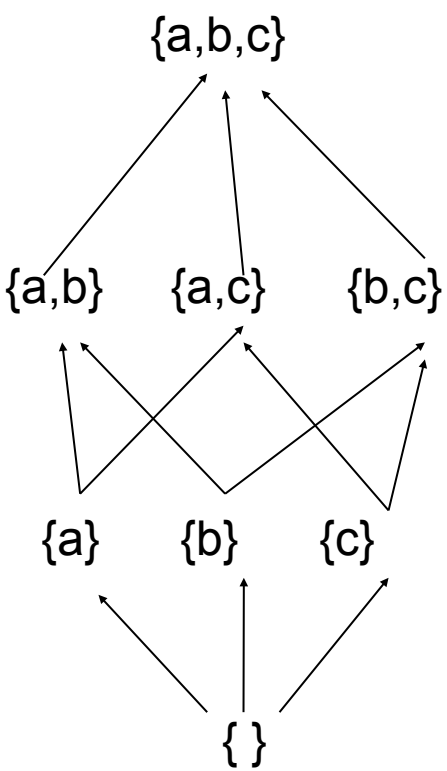

Finite poset with least element

- Poset in which
  - Set is finite
  - There is a least element that is below all other elements in poset
- Examples
  - Set of integers ordered by $\leq$ is *not* a finite poset with least element (no least element, not finite)
  - Set of natural numbers ordered by $\leq$ has a least element (0), but not finite
  - Set of factors of 12, ordered by $\leq$ has a least element as is finite
  - Powerset example from before is finite (how many elements?) with a least element ({ })

Domains

- "Finite poset with least element" is a mouthful, so we will abbreviate this to *domain*
- Later, we will add additional conditions to domains that are of interest to us in the context of dataflow analysis
  - (Goal: what is a lattice?)

Functions on domains

- If D is a domain, we can define a function $f : D \rightarrow D$
  - Function maps each element of domain on to another element of the domain
- Example: for D = powerset of {a, b, c}
  - $f(x) = x \cup \{a\}$
  - $g(x) = x - \{a\}$
  - $h(x) = \{a\} - x$

Monotonic functions

- A function $f : D \rightarrow D$ on a domain D is *monotonic* if
  - $x \sqsubseteq y \Rightarrow f(x) \sqsubseteq f(y)$
- Note: this is not the same as $x \sqsubseteq f(x)$
  - This means that x is *extensive*
- Intuition: think of f as an electrical circuit mapping input to output
  - If f is monotonic, raising the input voltage raises the output voltage (or keeps it the same)
  - If f is extensive, the output voltage is always the same or more than the input voltage

Examples

- Domain D is the powerset of {a, b, c}
- Montonic functions:
  - f(x) = { } (why?)
  - f(x) = x ∪ {a}
  - f(x) = x - {a}
- Not monotonic
  - f(x) = {a} - x (why?)
- Extensivity
  - f(x) = x ∪ {a} is monotonic *and* extensive
  - f(x) = x - {a} is monotonic but not extensive
  - f(x) = {a} - x is neither
- What is a function that is extensive, but not monotonic?

Fixpoints

- Suppose $f : D \rightarrow D$.
  - A value x is a *fixpoint* of f if $f(x) = x$
  - f maps x to itself
- Examples: D is a powerset of {a, b, c}
  - Identity function: f(x) = x
    - Every element is a fixpoint
  - f(x) = x ∪ {a}
    - Every set that contains a is a fixpoint
  - f(x) = {a} - x
    - No fixpoints

Fixpoint theorem

- One form of *Knaster-Tarski Theorem*:

  If D is a domain and $f : D \rightarrow D$ is monotonic, then f has at least one fixpoint

- More interesting consequence:

  If $\perp$ is the least element of D, then f has a *least fixpoint*, and that fixpoint is the largest element in the chain

  $\perp, f(\perp), f(f(\perp)), f(f(f(\perp))) \ldots f^n(\perp)$

- Least fixpoint: a fixpoint of f, x such that, if y is a fixpoint of f, then $x \sqsubseteq y$

Examples

- For domain of powersets, { } is the least element
- For identity function, $f^n(\{\ \})$ is the chain

  { }, { }, { }, ... so least fixpoint is { }, which is correct
- For $f(x) = x \cup \{a\}$, we get the chain

  { }, {a}, {a}, ... so least fixpoint is {a}, which is correct
- For $f(x) = \{a\} - x$, function is not monotonic, so not guaranteed to have a fixpoint!
- Important observation: as soon as the chain repeats, we have found the fixpoint (why?)

Proof of fixpoint theorem

- First, prove that largest element of chain $f^n(\perp)$ is a fixpoint

- Second, prove that $f^n(\perp)$ is the *least* fixpoint

Solving equations

- If D is a domain and $f : D \rightarrow D$ is a monotone function on that domain, then the equation f(x) = x has a least fixpoint, given by the largest element in the sequence

  $\perp, f(\perp), f(f(\perp)), f(f(f(\perp))) \ldots$

- Proof follows directly from fixpoint theorem

Adding a top

- Now let us consider domains with an element $\top$, such that for every point x in the domain, $x \sqsubseteq \top$
- New theorem: if D is a domain with a greatest element $\top$ and $f : D \rightarrow D$ is monotonic, then the equation $x = f(x)$ has a *greatest* solution, and that solution is the smallest element in the sequence

  $\top, f(\top), f(f(\top)), \ldots$
- Proof?

Multi-argument functions

- If D is a domain, a function $f : D \times D \rightarrow D$ is monotonic if it is monotonic in each argument when the other is held constant
- Intuition:
  - Electrical circuit has two inputs
  - If you raise either input while holding the other constant, the output either goes up or stays the same

Fixpoints of multi-arg functions

- Can generalize fixpoint theorem in a straightforward way
- If D is a domain and $f, g : D \times D \rightarrow D$ are monotonic, the following system of equations has a least fixpoint solution, calculated in the obvious way

  $x = f(x, y)$ and $y = g(x, y)$
- Can generalize this to more than two variables and domains with greatest elements easily

Lattices

- A bounded *lattice* is a partially ordered set with a $\perp$ and $\top$, with two special functions for any pair of points *x* and *y* in the lattice:
  - A *join*: $x \sqcup y$ is the least element that is greater than x and y (also called the *least upper bound*)
  - A *meet*: $x \sqcap y$ is the greatest element that is less than x and y (also called the *greatest lower bound*)
- Are $\sqcup$ and $\sqcap$ monotonic?

More about lattices

- Bounded lattices with a finite number of elements are a special case of domains with $\top$ (why are they not the same?)
  - Systems of monotonic functions (including $\sqcup$ and $\sqcap$) will have fixpoints
- But some lattices are infinite! (example: the lattice for constant propagation)
  - It turns out that you can show a monotonic function will have a least fixpoint for any lattice (or domain) of *finite height*
  - Finite height: any totally ordered subset of domain (this is called a *chain*) must be finite
  - Why does this work?

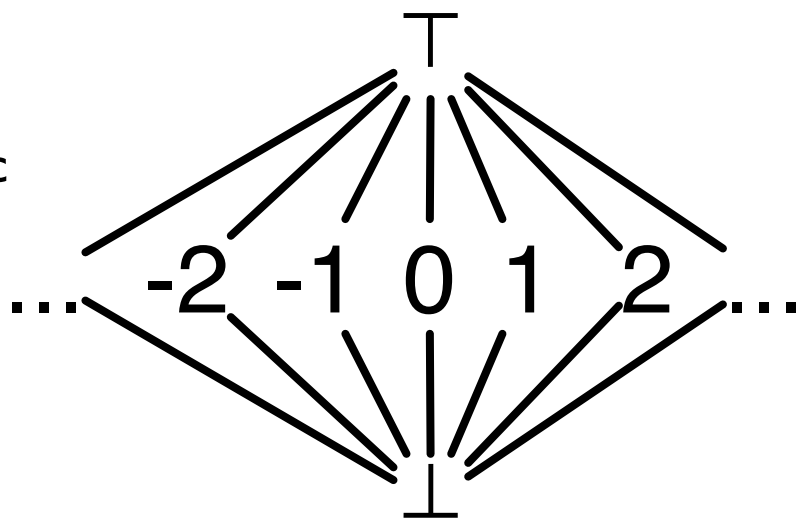

Solving system of equations

- Consider

  $x = f(x, y, z)$

  $y = g(x, y, z)$

  $z = h(x, y, z)$

- Obvious iterative solution: evaluate every function at every step:

  $\perp \quad f(\perp,\perp,\perp) \quad \ldots$

  $\perp \quad g(\perp,\perp,\perp) \quad \ldots$

  $\perp \quad h(\perp,\perp,\perp) \quad \ldots$

Worklist algorithm

- Obvious point: only necessary to re-evaluate functions whose inputs have changed
- Worklist algorithm
  - Initialize worklist with all equations
  - Initialize solution vector S to all $\perp$
  - While worklist not empty
    - Get equation from worklist
    - Re-evaluate equation based on S, update entry corresponding to lhs in S
    - Put all equations which use this lhs on their rhs in the worklist
- Claim: the worklist algorithm for constant propagation is an instance of this approach

Mapping worklist algorithm

- Careful: the "variables" in constant propagation are not the individual variable values in a state vector. Each variable (from a fixpoint perspective) is an entire state vector – there are as many variables as there are edges in the CFG
- Functions:
  - Program statements: eval(e, V_{in})
    - These are called *transfer functions*
    - Need to make sure this is monotonic
  - Branches
    - Propagates input state vector to output – trivially monotonic
  - Merges
    - Use join or meet to combine multiple input variables – monotonic by definition

Constant propagation

- Step 1: choose lattice
  - Use constant lattice (infinite, but finite height)
- Step 2: choose direction of dataflow
  - Run forward through program
- Step 3: create monotonic transfer functions
  - If input goes from $\perp$ to constant, output can only go up. If input goes from constant to $\top$, output goes to $\top$
- Step 4: choose *confluence operator*
  - What do do at merges? For constant propagation, use join