ECE 573: Compilers & Translation Systems Engineering

Instructor: Milind Kulkarni (milind@purdue.edu)

http://www.engineering.purdue.edu/~milind/ece573/2011fall

Announcements

- "Problem Set" 0 online
  - Short questionnaire
- Project step 0 due this Friday
  - Use subject line "ECE 573: Project Step 0"
  - Let me know if you plan to work with a partner
    - Send me an email even if you don't!

What is a compiler?

- Traditionally: Program that analyzes and translates from a high level language (e.g., C++) to low-level assembly language that can be executed by hardware

```
int a, b;
a = 3;
if (a < 4) {
   b = 2;
} else {
   b = 3;
}
```

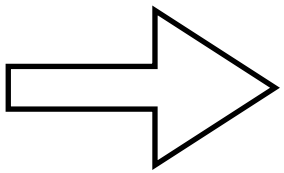

```
      var a
      var b
      mov 3 a
      mov 4 r1
      cmpi a r1
      jge l_e
      mov 2 b
      jmp l_d
l_e:  mov 3 b
l_d:  ;done
```

Compilers are *translators*

- Fortran
- C
- C++
- Java
- Text processing language
- HTML/XML
- Command & Scripting Languages
- Natural language
- Domain specific languages

translate →

- Machine code
- Virtual machine code
- Transformed source code
- Augmented source code
- Low-level commands
- Semantic components
- Another language

Compilers are *optimizers*

- Can perform optimizations to make a program more efficient

```
int a, b, c;
b = a + 3;
c = a + 3;
```

⇨

```
var a
var b
var c
mov a r1
addi 3 r1
mov r1 b
mov a r2
addi 3 r2
mov r2 c
```

⇨

```
var a
var b
var c
mov a r1
addi 3 r1
mov r1 b
mov r1 c
```

Why do we need compilers?

- Compilers provide *portability*
- Old days: whenever a new machine was built, programs had to be rewritten to support new instruction sets
- IBM System/360 (1964): Common Instruction Set Architecture (ISA) — programs could be run on any machine which supported ISA
  - Common ISA is a huge deal (note continued existence of x86)
- But still a problem: when new ISA is introduced (EPIC) or new extensions added (x86-64), programs would have to be rewritten
- Compilers bridge this gap: write new compiler for an ISA, and then simply recompile programs!

Why do we need compilers? (II)

- Compilers enable high performance and productivity
- Old: programmers wrote in assembly language, architectures were simple (no pipelines, caches, etc.)
  - Close match between programs and machines — easier to achieve performance
- New: programmers write in high level languages (Ruby, Python), architectures are complex (superscalar, out-of-order execution, multicore)
- Compilers are needed to bridge this *semantic gap*
  - Compilers let programmers write in high level languages and still get good performance on complex architectures

Semantic Gap

```
def index
  @posts = Post.find(:all)

  respond_to do |format|
    format.html # index.html.erb
    format.xml  { render :xml =>
@posts }
  end
end
```

Snippet of Ruby-on-rails code

AMD Barcelona architecture

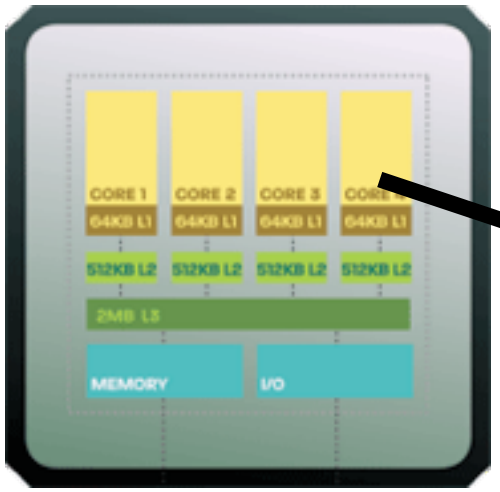

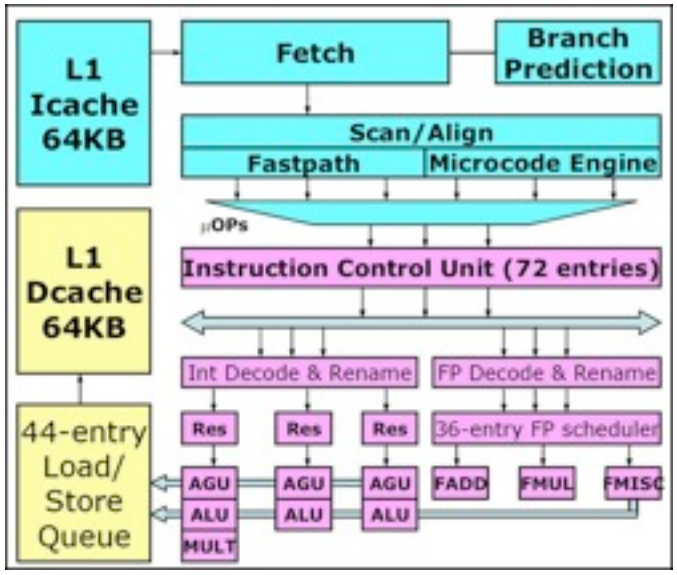

Semantic Gap

```
def index
  @posts = Post.find(:all)

  respond_to do |format|
    format.html # index.html.erb
    format.xml  { render :xml =>
@posts }
  end
end
```

Snippet of Ruby-on-rails

This would be impossible without compilers!

AMD Barcelona architecture

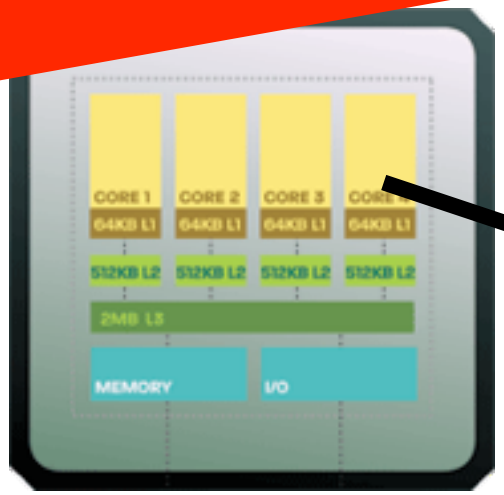

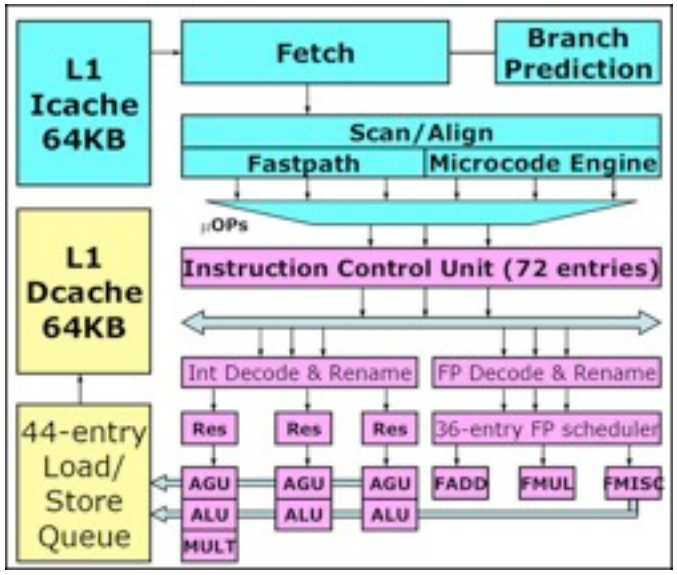

Some common compiler types

1. High level language ⇒ assembly language (e.g., gcc)
2. High level language ⇒ machine independent bytecode (e.g., javac)
3. Bytecode ⇒ native machine code (e.g., java's JIT compiler)
4. High level language ⇒ high level language (e.g., domain specific languages, many research languages—including mine!)

HLL to Assembly

- Compiler converts program into assembly
- Assembler is machine-specific translator which converts assembly into machine code

```
add $7 $8 $9 ($7 = $8 + $9) ⇒ 000000 00111 01000 01001 00000 100000
```

- Conversion is usually one-to-one with some exceptions
  - Program locations
  - Variable names

HLL to Bytecode

- Compiler converts program into machine independent bytecode
  - e.g., javac generates Java bytecode, C# compiler generates CIL
- Interpreter then executes bytecode "on-the-fly"
  - Bytecode instructions are "executed" by invoking methods of the interpreter, rather than directly executing on the machine
- Aside: what are the pros and cons of this approach?

Bytecode to Assembly

- Compiler converts program into machine independent bytecode
  - e.g., javac generates Java bytecode, C# compiler generates CIL
- Just-in-time compiler compiles code *while program executes* to produce machine code
  - Is this better or worse than a compiler which generates machine code directly from the program?

Structure of a Compiler

Scanner

- Compiler starts by seeing only program text

```
if (a < 4) {
    b = 5
}
```

Scanner

- Compiler starts by seeing only program text

```
'i' 'f' '␣' '(' 'a' '<' '4' ')'
'␣' '{' '\n' '\t' 'b' '=' '5'
'\n' '}'
```

Scanner

- Compiler starts by seeing only program text
- Scanner converts program text into string of *tokens*

```
'i' 'f' '␣' '(' 'a' '<' '4' ')'
'␣' '{' '\n' '\t' 'b' '=' '5'
'\n' '}'
```

Scanner

- Compiler starts by seeing only program text
- Scanner converts program text into string of *tokens*

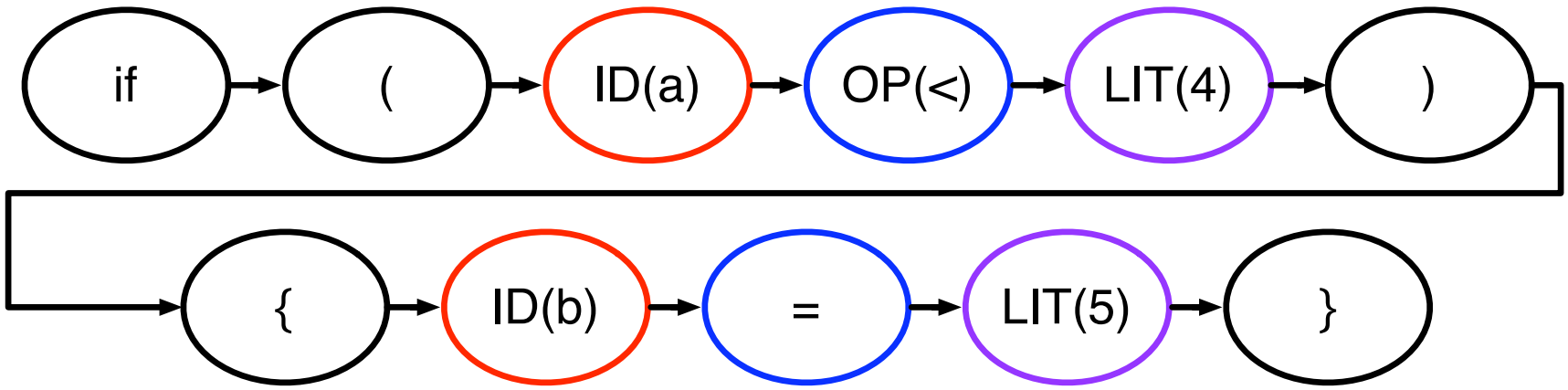

- But we still don't know what the *syntactic structure* of the program is

Parser

- Converts string of tokens into a *parse tree* or an *abstract syntax tree*.
- Captures syntactic structure of code (i.e., "this is an if statement, with a then-block")

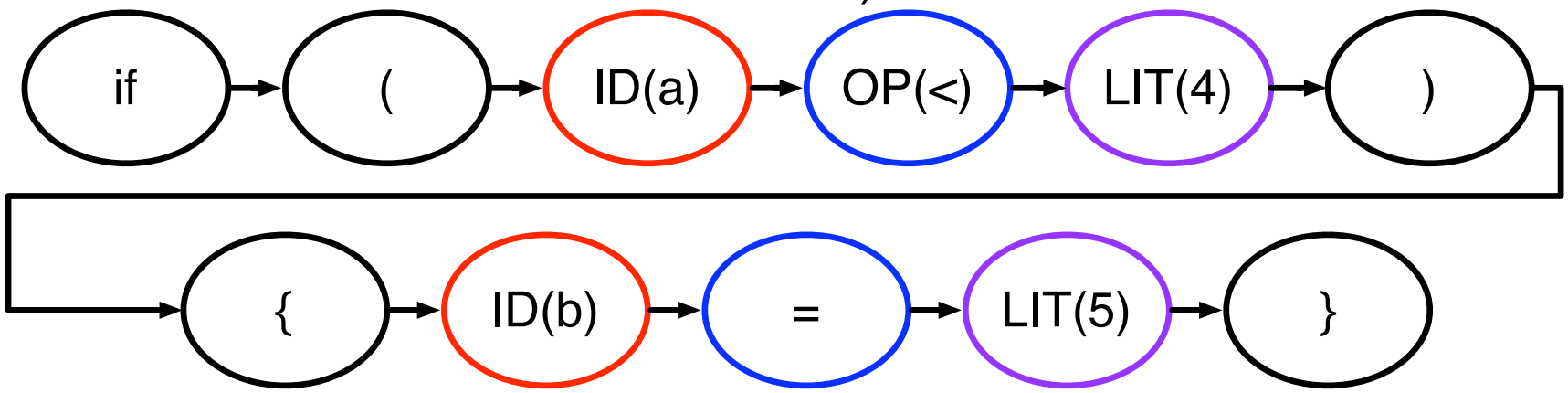

Parser

- Converts string of tokens into a *parse tree* or an *abstract syntax tree*.
- Captures syntactic structure of code (i.e., "this is an if statement, with a then-block")

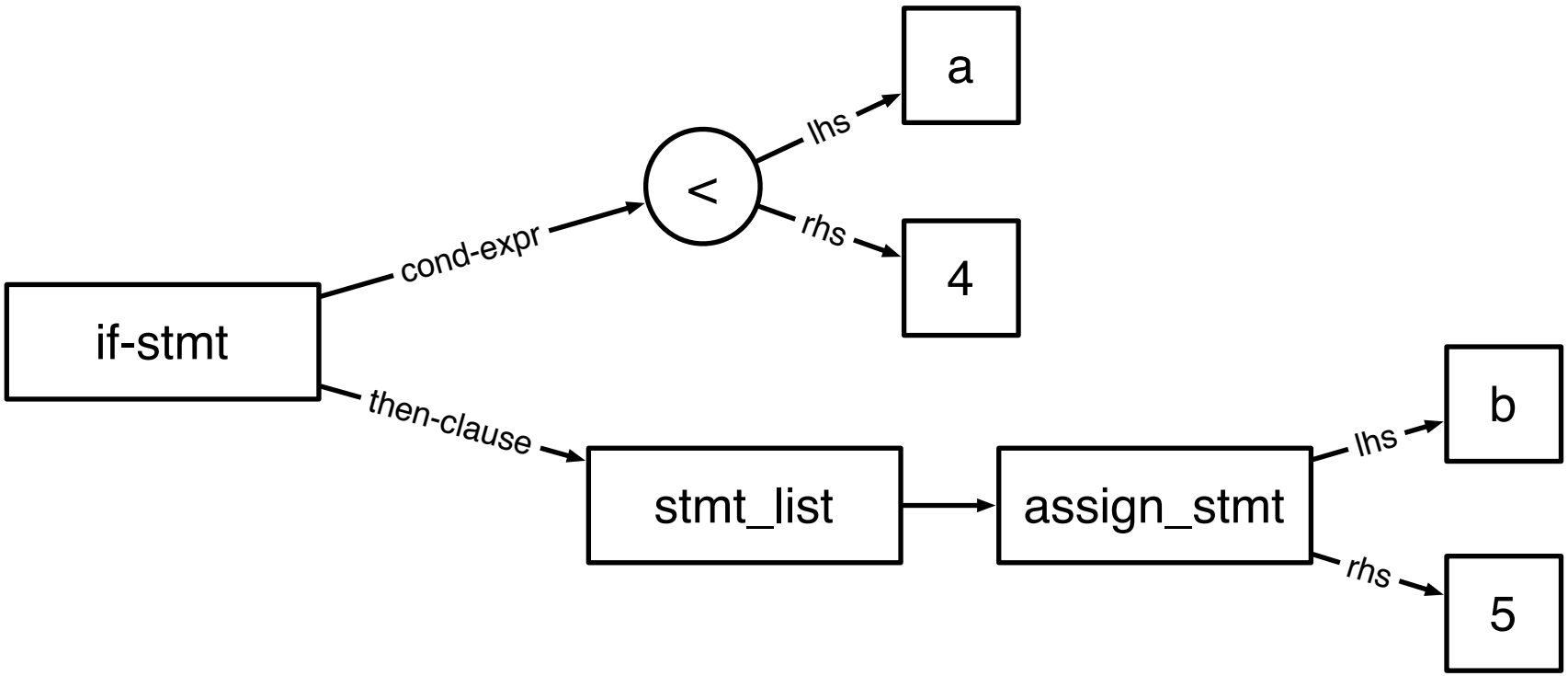

Semantic actions

- Interpret the *semantics* of syntactic constructs
  - Note that up until now we have only been concerned with what the *syntax* of the code is
  - What's the difference?

Syntax vs. Semantics

- Syntax: "grammatical" structure of language
  - What symbols, in what order, is a legal part of the language?
    - But something that is syntactically correct may mean nothing!
    - "colorless green ideas sleep furiously"
- Semantics: meaning of language
  - What does a particular set of symbols, in a particular order, *mean?*
    - What does it mean to be an if statement?
    - "evaluate the conditional, if the conditional is true, execute the then clause, otherwise execute the else clause"

A note on semantics

- How do you define semantics?
  - Static semantics: properties of programs
    - All variables must have a type
    - Expressions must use consistent types
    - Can define using *attribute grammars*
  - Execution semantics: how does a program execute?
    - Can define an *operational* or *denotational* semantics for a language
    - Not covered in this class (take CS 565)
  - For many languages, "the compiler is the specification"

Semantic actions

- Actions taken by compiler based on the semantics of program statements
  - Building a *symbol table*
  - Generating *intermediate representations*

Symbol tables

- A list of every declaration in the program, along with other information
  - Variable declarations: types, scope
  - Function declarations: return types, # and type of arguments

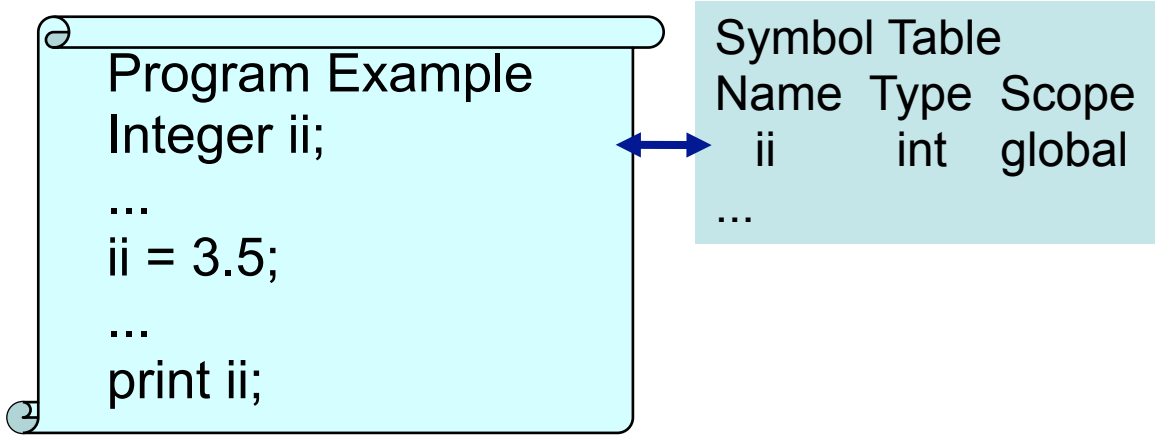

Intermediate representation

- Also called *IR*
- A (relatively) low level representation of the program
  - But not machine-specific!
- One example: *three address code*

```
        bge a, 4, done
        mov 5, b
done:   //done!
```

- Each instruction can take at most three operands (variables, literals, or labels)
  - Note: no registers!

Optimizer

- Transforms code to make it more efficient
- Different kinds, operating at different levels
  - High-level optimizations
    - Loop interchange, parallelization
    - Operates at level of AST, or even source code
  - Scalar optimizations
    - Dead code elimination, common sub-expression elimination
    - Operates on IR
  - Local optimizations
    - Strength reduction, constant folding
    - Operates on small sequences of instructions

Code generation

- Generate assembly from intermediate representation
  - Select which instructions to use
  - Schedule instructions
  - Decide which registers to use

```
      bge a, 4, done
      mov 5, b
done: //done!
```

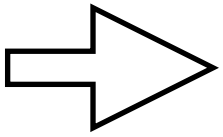

```
      ld a, r1
      mov 4, r2
      cmp r1, r2
      bge done
      mov 5, r3
      st r3, b
done:
```

Code generation

- Generate assembly from intermediate representation
  - Select which instructions to use
  - Schedule instructions
  - Decide which registers to use

```
      bge a, 4, done
      mov 5, b
done: //done!
```

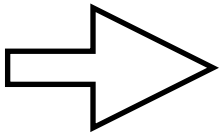

```
      mov 4, r1
      ld a, r2
      cmp r1, r2
      blt done
      mov 5, r1
      st r1, b
done:
```

Overall structure of a compiler

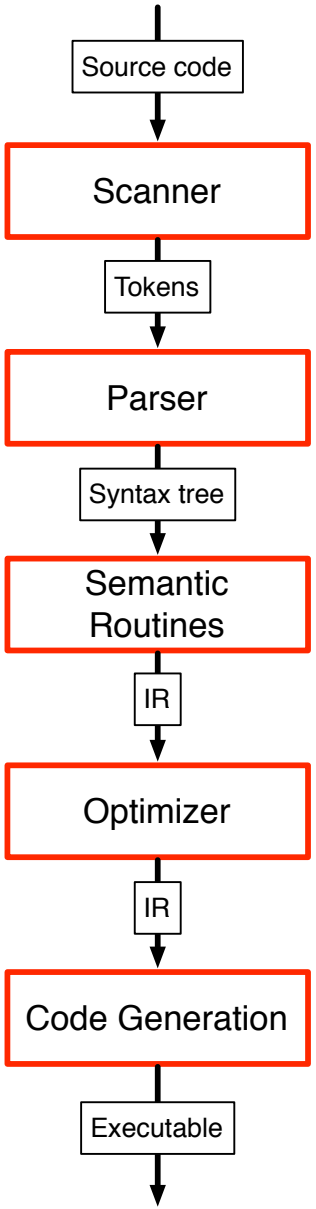

Use *regular expressions* to define tokens. Can then use scanner generators such as lex or flex.

Define language using *context free grammars*. Can then use parser generators such as yacc or bison.

Semantic routines done by hand. But can be formalized.

Written manually. Automation is an active research area (e.g., dataflow analysis frameworks)

Written manually

Overall structure of a compiler

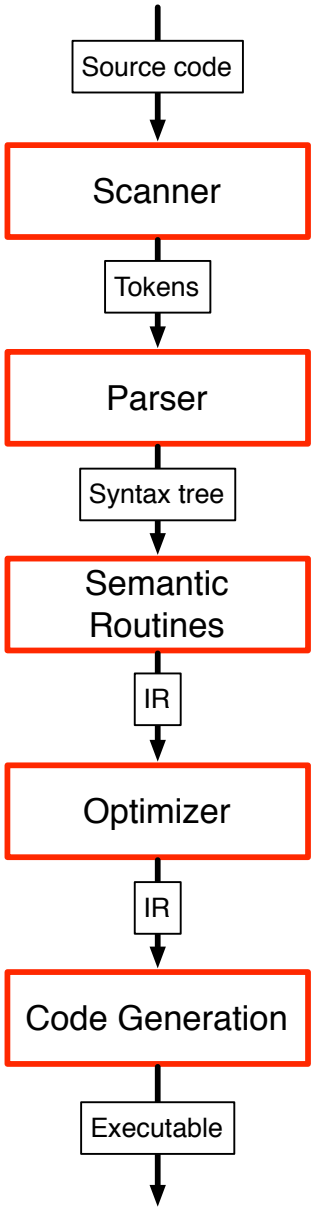

Use *regular expressions* to define tokens. Can then use scanner generators such as lex or flex.

Define language using *context free grammars*. Can t
generators such as yacc or bison

Many of these passes can be combined

ized.

ritten manually. Automation is an active research area (e.g., dataflow analysis frameworks)

Written manually

Design considerations (I)

- Compiler and language designs influence each other
  - Higher level languages are harder to compile
    - More work to bridge the gap between language and assembly
  - Flexible languages are often harder to compile
    - Dynamic typing (Ruby, Python) makes a language very flexible, but it is hard for a compiler to catch errors (in fact, many simply won't)

Design considerations (II)

- Compiler design is influenced by architectures
  - CISC vs. RISC
  - CISC designed for days when programmers wrote in assembly
    - For a compiler to take advantage of string manipulation instructions, it must be able to recognize them
  - RISC has a much simpler instruction model
    - Easier to compile for