Control flow graphs and loop optimizations

Agenda

- Building control flow graphs
- Low level loop optimizations
  - Code motion
  - Strength reduction
  - Unrolling
- High level loop optimizations
  - Loop fusion
  - Loop interchange
  - Loop tiling

Moving beyond basic blocks

- Up until now, we have focused on single basic blocks
- What do we do if we want to consider larger units of computation
  - Whole procedures?
  - Whole program?
- Idea: capture *control flow* of a program
  - How control transfers between basic blocks due to:
    - Conditionals
    - Loops

Representation

- Use standard three-address code
- Jump targets are labeled
- Also label beginning/end of functions
- Want to keep track of *targets of jump statements*
  - Any statement whose execution may immediately follow execution of jump statement
  - *Explicit* targets: targets mentioned in jump statement
  - *Implicit* targets: statements that follow conditional jump statements
    - The statement that gets executed if the branch is not taken

Running example

```
A = 4
t1 = A * B
repeat {
  t2 = t1/C
  if (t2 ≥ W) {
    M = t1 * k
    t3 = M + I
  }
  H = I
  M = t3 - H
} until (T3 ≥ 0)
```

Running example

```
1        A = 4
2        t1 = A * B
3   L1:  t2 = t1 / C
4        if t2 < W goto L2
5        M = t1 * k
6        t3 = M + I
7   L2:  H = I
8        M = t3 - H
9        if t3 ≥ 0 goto L3
10       goto L1
11  L3:  halt
```

Control flow graphs

- Divides statements into *basic blocks*
- Basic block: a maximal sequence of statements $I_0, I_1, I_2, \ldots, I_n$ such that if I_j and I_{j+1} are two adjacent statements in this sequence, then
  - The execution of I_j is always immediately followed by the execution of I_{j+1}
  - The execution of I_{j+1} is always immediate preceded by the execution of I_j
- Edges between basic blocks represent potential flow of control

CFG for running example

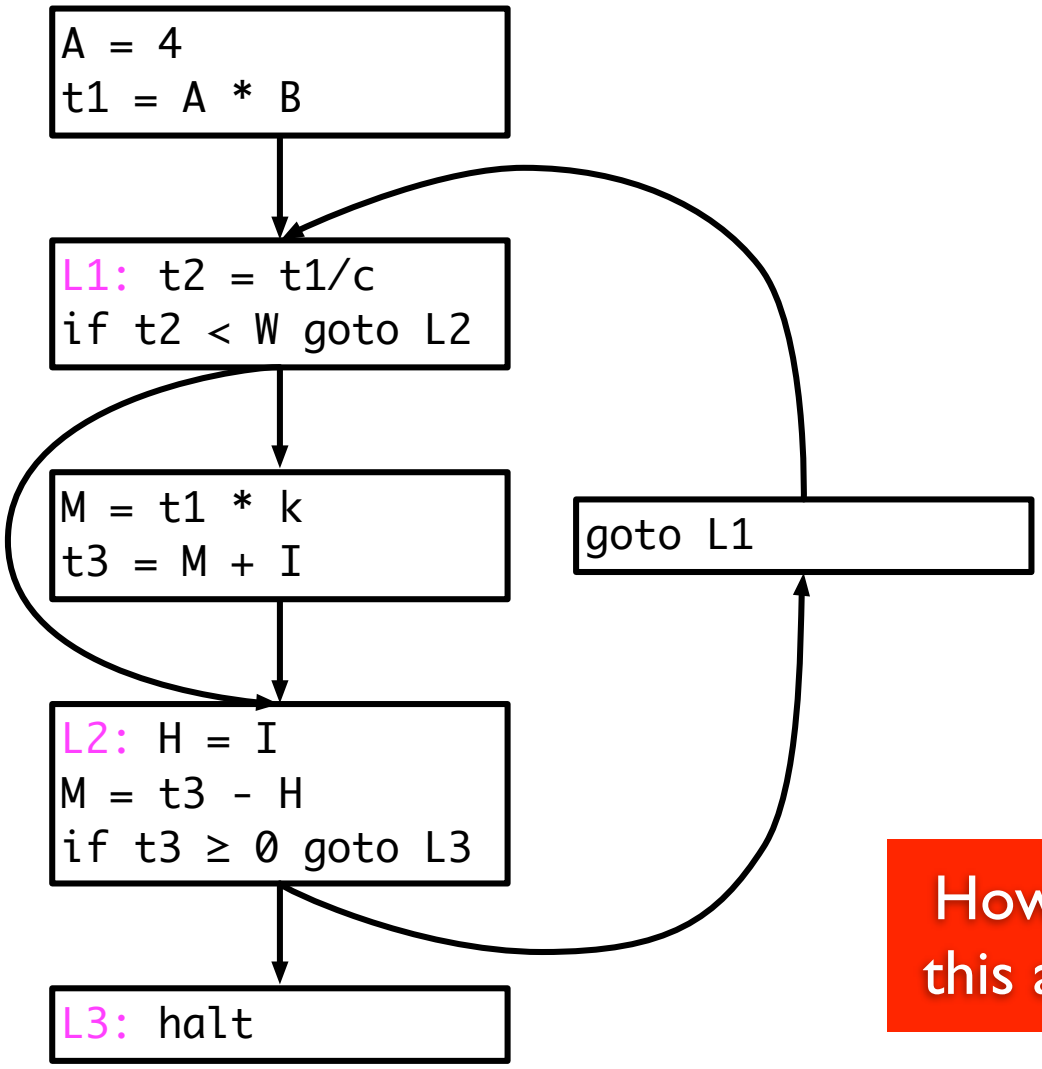

How do we build this automatically?

Constructing a CFG

- To construct a CFG where each node is a basic block
  - Identify *leaders*: first statement of a basic block
  - In program order, construct a block by appending subsequent statements up to, but not including, the next leader
- Identifying leaders
  - First statement in the program
  - Explicit target of any conditional or unconditional branch
  - Implicit target of any branch

Partitioning algorithm

- Input: set of statements, *stat(i)* = i^{th} statement in input
- Output: set of *leaders*, set of basic blocks where *block(x)* is the set of statements in the block with leader *x*
- Algorithm

```
leaders = {1}            //Leaders always includes first statement
for i = 1 to |n|         //|n| = number of statements
    if stat(i) is a branch, then
        leaders = leaders ∪ all potential targets
end for
worklist = leaders
while worklist not empty do
    x = remove earliest statement in worklist
    block(x) = {x}
    for (i = x + 1; i ≤ |n| and i ∉ leaders; i++)
        block(x) = block(x) ∪ {i}
    end for
end while
```

Running example

```
1        A = 4
2        t1 = A * B
3   L1:  t2 = t1 / C
4        if t2 < W goto L2
5        M = t1 * k
6        t3 = M + I
7   L2:  H = I
8        M = t3 - H
9        if t3 ≥ 0 goto L3
10       goto L1
11  L3:  halt
```

Leaders =

Basic blocks =

Running example

```
 1          A = 4
 2          t1 = A * B
 3   L1:    t2 = t1 / C
 4          if t2 < W goto L2
 5          M = t1 * k
 6          t3 = M + I
 7   L2:    H = I
 8          M = t3 - H
 9          if t3 ≥ 0 goto L3
10          goto L1
11   L3:    halt
```

Leaders = $\{1, 3, 5, 7, 10, 11\}$

Basic blocks = $\{ \{1, 2\}, \{3, 4\}, \{5, 6\}, \{7, 8, 9\}, \{10\}, \{11\} \}$

Putting edges in CFG

- There is a directed edge from B_1 to B_2 if
  - There is a branch from the last statement of B_1 to the first statement (leader) of B_2
  - B_2 immediately follows B_1 in program order and B_1 does not end with an unconditional branch
- Input: *block*, a sequence of basic blocks
- Output: The CFG

```
for i = 1 to |block|
    x = last statement of block(i)
    if stat(x) is a branch, then
        for each explicit target y of stat(x)
            create edge from block i to block y
        end for
    if stat(x) is not unconditional then
        create edge from block i to block i+1
end for
```

Result

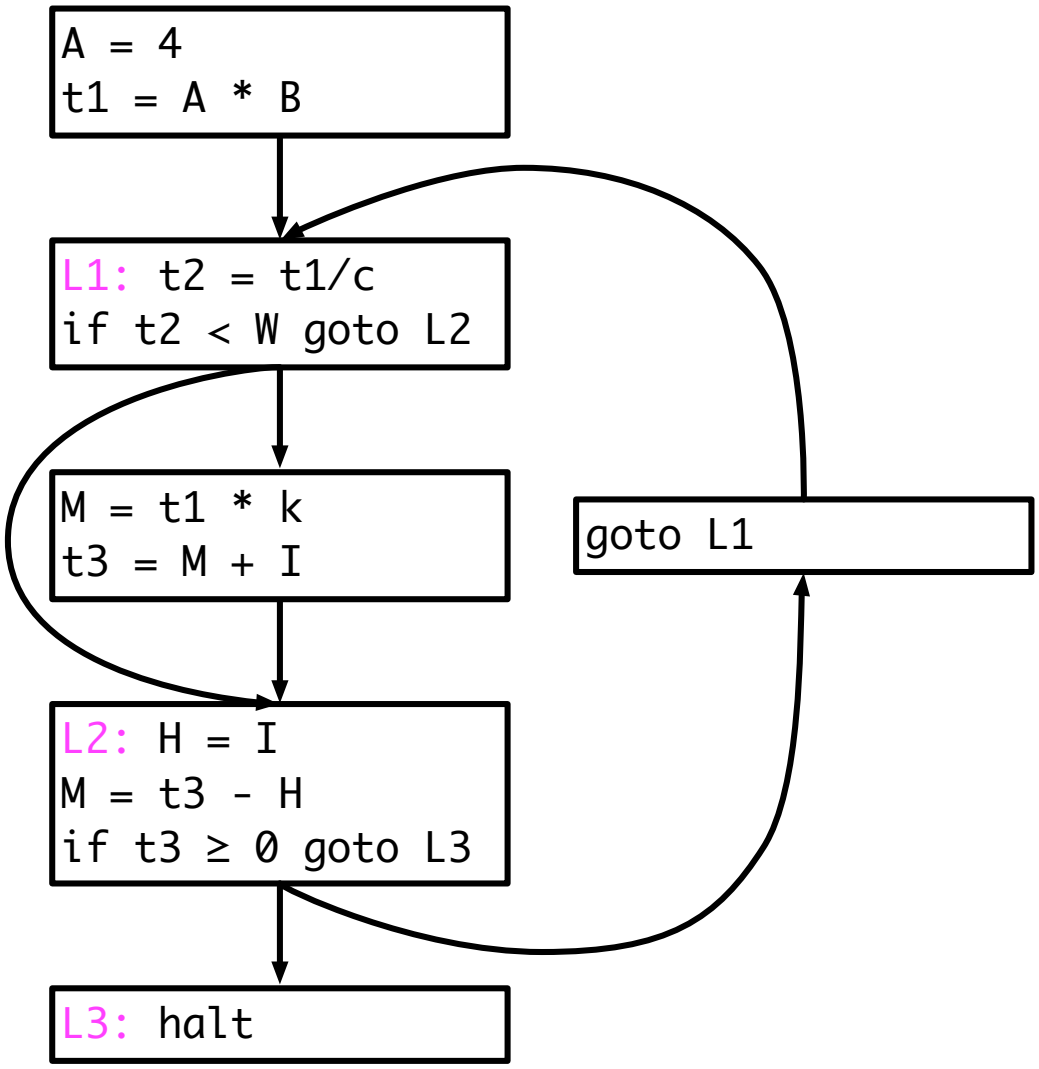
A = 4
t1 = A * B
L1: t2 = t1/c
if t2 < W goto L2
M = t1 * k
t3 = M + I
goto L1
L2: H = I
M = t3 - H
if t3 ≥ 0 goto L3
L3: halt

Discussion

- Some times we will also consider the *statement-level* CFG, where each node is a statement rather than a basic block
  - Either kind of graph is referred to as a CFG
- In statement-level CFG, we often use a node to explicitly represent *merging* of control
  - Control merges when two different CFG nodes point to the same node
- Note: if input language is *structured*, front-end can generate basic block directly
  - "GOTO considered harmful"

Statement level CFG

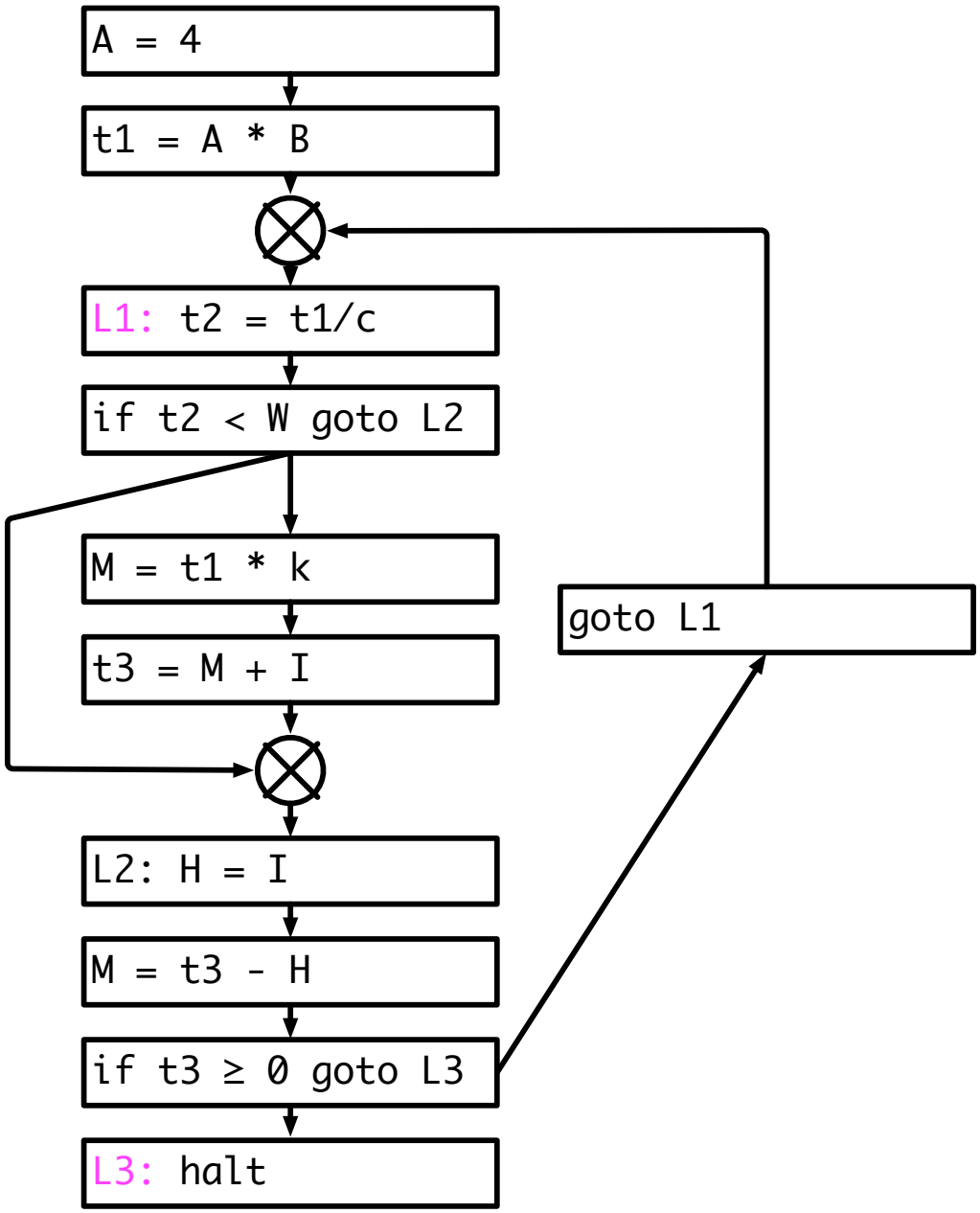

Loop optimization

- Low level optimization
  - Moving code around in a single loop
  - Examples: loop invariant code motion, strength reduction, loop unrolling
- High level optimization
  - Restructuring loops, often affects multiple loops
  - Examples: loop fusion, loop interchange, loop tiling

Low level loop optimizations

- Affect a single loop
- Usually performed at three-address code stage or later in compiler
- First problem: identifying loops
  - Low level representation doesn't have loop statements!

Identifying loops

- First, we must identify *dominators*
  - Node a dominates node b if every possible execution path that gets to b *must* pass through a
- Many different algorithms to calculate dominators – we will not cover how this is calculated
- A *back edge* is an edge from b to a when a dominates b
- The target of a back edge is a *loop header*

Natural loops

- Will focus on *natural loops* – loops that arise in structured programs
- For a node n to be in a loop with header h
  - n must be dominated by h
  - There must be a path in the CFG from n to h through a back-edge to h
- What are the back edges in the example to the right? The loop headers? The natural loops?

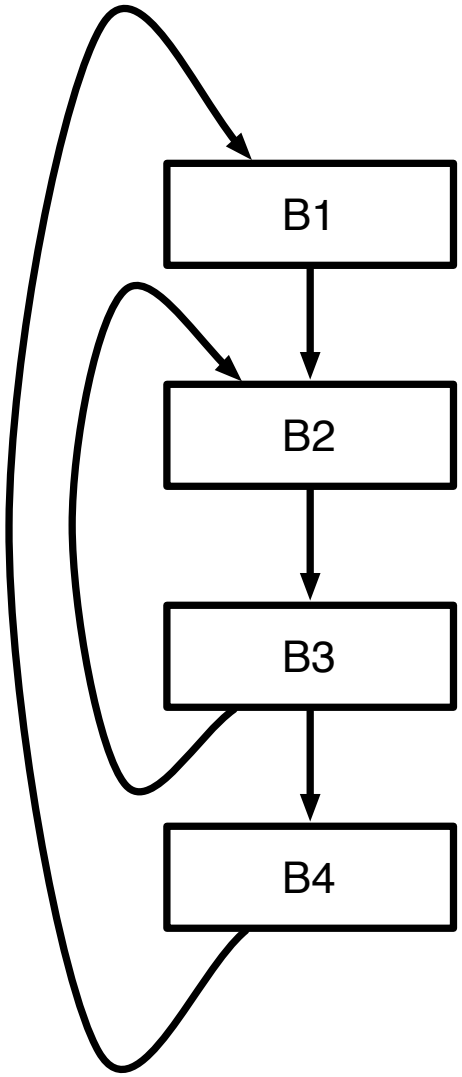

Loop invariant code motion

- Idea: some expressions evaluated in a loop never change; they are *loop invariant*
  - Can move loop invariant expressions outside the loop, store result in temporary and just use the temporary in each iteration
  - Why is this useful?

Identifying loop invariant code

- To determine if a statement

  s: a = b op c

  is loop invariant, find all definitions of b and c that *reach* s

  - A statement t defining b reaches s if there is a path from t to s where b is not re-defined

- s is loop invariant if both b and c satisfy one of the following

  - it is constant
  - all definitions that reach it are from outside the loop
  - only one definition reaches it and that definition is also loop invariant

Moving loop invariant code

- Just because code is loop invariant doesn't mean we can move it!

```
for (...)
    a = b + c
```

```
do
  if (*)
    break
  a = 5
while (*)
c = a;
```

```
for (...)
  if (*)
    a = 5
  else
    a = 6
```

```
a = 5;
for (...)
  if (*)
    a = 4 + c
b = a
```

- We can move a loop invariant statement a = b op c if
  - The statement dominates all loop exits where a is live
  - There is only one definition of a in the loop
  - a is not live before the loop
- Move instruction to a *preheader*, a new block put right before loop header

Strength reduction

- Like strength reduction peephole optimization
  - Peephole: replace expensive instruction like a * 2 with a << 1
- Replace expensive instruction, multiply, with a cheap one, addition
  - Applies to uses of an *induction variable*
  - Opportunity: array indexing

```
for (i = 0; i < 100; i++)
  A[i] = 0;
```

```
    i = 0;
L2: if (i >= 100) goto L1
    j = 4 * i + &A
    *j = 0;
    i = i + 1;
    goto L2
L1:
```

Strength reduction

- Like strength reduction peephole optimization
  - Peephole: replace expensive instruction like a * 2 with a << 1
- Replace expensive instruction, multiply, with a cheap one, addition
  - Applies to uses of an *induction variable*
  - Opportunity: array indexing

```
for (i = 0; i < 100; i++)
  A[i] = 0;
```

↓

```
    i = 0; k = &A;
L2:if (i >= 100) goto L1
    j = k;
    *j = 0;
    i = i + 1; k = k + 4;
    goto L2
L1:
```

Induction variables

- A *basic induction variable* is a variable j
  - whose only definition within the loop is an assignment of the form $j = j \pm c$, where c is loop invariant
  - Intuition: the variable which determines number of iterations is usually an induction variable
- A *mutual induction variable* i may be
  - defined once within the loop, and its value is a linear function of some other induction variable j such that

    $i = c1 * j \pm c2$ or $i = j/c1 \pm c2$

    where c1, c2 are loop invariant
- A *family* of induction variables include a basic induction variable and any related mutual induction variables

Strength reduction algorithm

- Let i be an induction variable in the family of the basic induction variable j, such that i = c1 * j + c2
  - Create a new variable i'
  - Initialize in preheader

    i' = c1 * j + c2
  - Track value of j. After j = j + c3, perform

    i' = i' + (c1 * c3)
  - Replace definition of i with

    i = i'
- Key: c1, c2, c3 are all loop invariant (or constant), so computations like (c1 * c3) can be moved outside loop

Linear test replacement

- After strength reduction, the loop test may be the only use of the basic induction variable
- Can now eliminate induction variable altogether
- Algorithm
  - If only use of an induction variable is the loop test and its increment, and if the test is always computed
  - Can replace the test with an equivalent one using one of the mutual induction variables

```
i = 2
for (; i < k; i++)
  j = 50*i
  ... = j
```

↓ Strength reduction

```
i = 2; j' = 50 * i
for (; i < k; i++, j' += 50)
  ... = j'
```

↓ Linear test replacement

```
i = 2; j' = 50 * i
for (; j' < 50*k; j' += 50)
  ... = j'
```

Loop unrolling

- Modifying induction variable in each iteration can be expensive
- Can instead *unroll* loops and perform multiple iterations for each increment of the induction variable
- What are the advantages and disadvantages?

```
for (i = 0; i < N; i++)
  A[i] = ...
```

↓ Unroll by factor of 4

```
for (i = 0; i < N; i += 4)
  A[i] = ...
  A[i+1] = ...
  A[i+2] = ...
  A[i+3] = ...
```

High level loop optimizations

- Many useful compiler optimizations require *restructuring* loops or sets of loops
  - Combining two loops together (*loop fusion*)
  - Switching the order of a nested loop (*loop interchange*)
  - Completely changing the traversal order of a loop (*loop tiling*)
- These sorts of high level loop optimizations usually take place at the AST level (where loop structure is obvious)

Cache behavior

- Most loop transformations target cache performance
  - Attempt to increase *spatial* or *temporal* locality
  - Locality can be exploited when there is *reuse* of data (for temporal locality) or recent access of nearby data (for spatial locality)
- Loops are a good opportunity for this: many loops iterate through matrices or arrays
- Consider matrix-vector multiply example
  - Multiple traversals of vector: opportunity for spatial and temporal locality
  - Regular access to array: opportunity for spatial locality

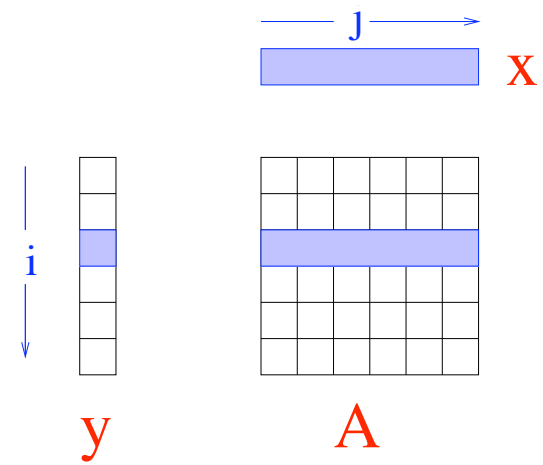

$$y = Ax$$

```
for (i = 0; i < N; i++)
  for (j = 0; j < N; j++)
    y[i] += A[i][j] * x[j]
```

Loop fusion

```
do I = 1, n
   c[i] = a[i]
end do
do I = 1, n
   b[i] = a[i]
end do
```

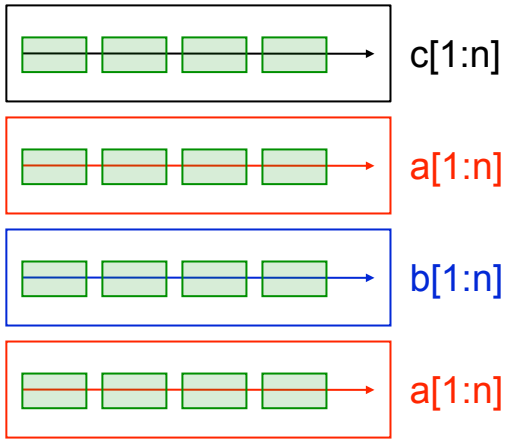

- Combine two loops together into a single loop
- Why is this useful?
- Is this always legal?

```
do I = 1, n
   c[i] = a[i]
   b[i] = a[i]
end do
```

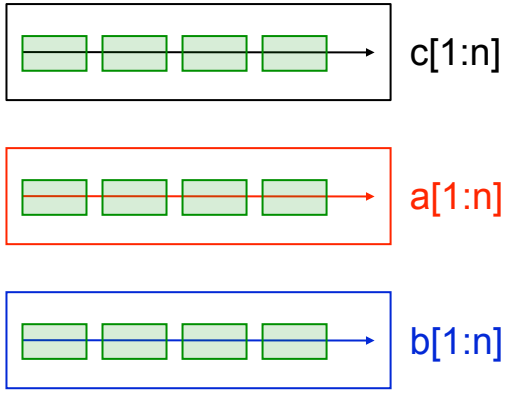

Loop interchange

- Change the order of a nested loop
- This is not always legal – it changes the order that elements are accessed!
- Why is this useful?
  - Consider matrix-matrix multiply when A is stored in column-major order (i.e., each column is stored in contiguous memory)

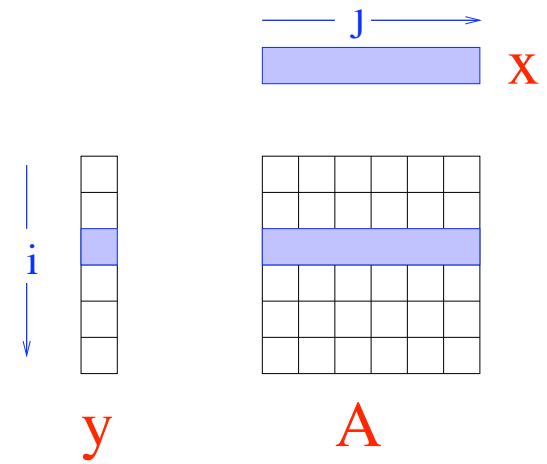


```
for (i = 0; i < N; i++)
  for (j = 0; j < N; j++)
    y[i] += A[i][j] * x[j]
```

Loop interchange

- Change the order of a nested loop
- This is not always legal – it changes the order that elements are accessed!
- Why is this useful?
  - Consider matrix-matrix multiply when A is stored in column-major order (i.e., each column is stored in contiguous memory)

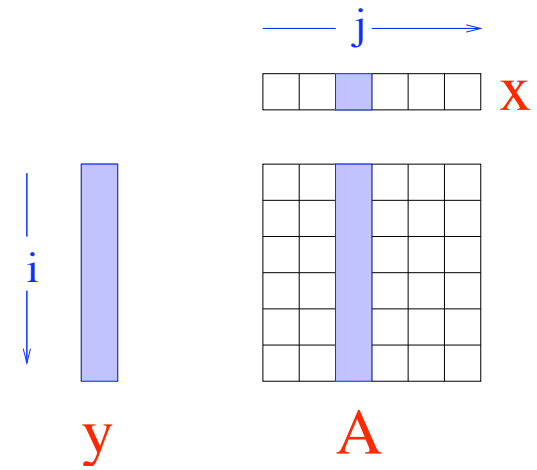


```
for (j = 0; j < N; j++)
  for (i = 0; i < N; i++)
    y[i] += A[i][j] * x[j]
```

Loop tiling

- Also called "loop blocking"
- One of the more complex loop transformations
- Goal: break loop up into smaller pieces to get spatial and temporal locality
  - Create new inner loops so that data accessed in inner loops fit in cache
- Also changes iteration order, so may not be legal

```
for (i = 0; i < N; i++)
  for (j = 0; j < N; j++)
    y[i] += A[i][j] * x[j]
```

```
for (ii = 0; ii < N; ii += B)
  for (jj = 0; jj < N; jj += B)
    for (i = ii; i < ii+B; i++)
      for (j = jj; j < jj+B; j++)
        y[i] += A[i][j] * x[j]
```

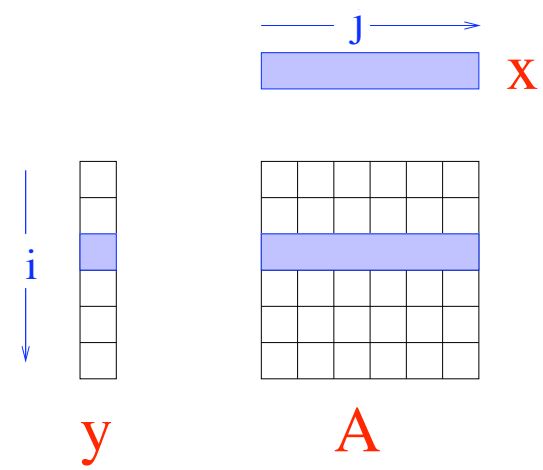

Loop tiling

- Also called "loop blocking"
- One of the more complex loop transformations
- Goal: break loop up into smaller pieces to get spatial and temporal locality
  - Create new inner loops so that data accessed in inner loops fit in cache
- Also changes iteration order, so may not be legal

```
for (i = 0; i < N; i++)
  for (j = 0; j < N; j++)
    y[i] += A[i][j] * x[j]
```

```
for (ii = 0; ii < N; ii += B)
  for (jj = 0; jj < N; jj += B)
    for (i = ii; i < ii+B; i++)
      for (j = jj; j < jj+B; j++)
        y[i] += A[i][j] * x[j]
```

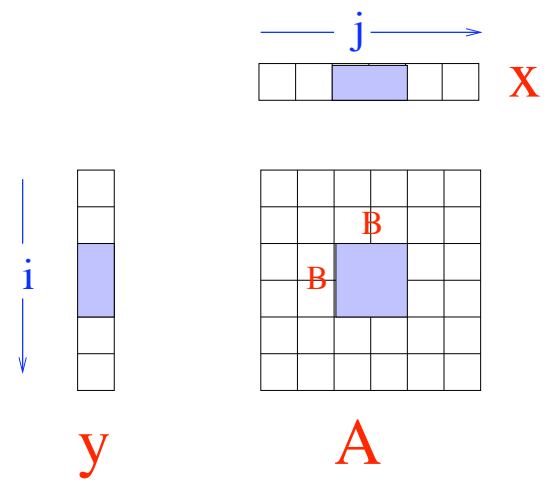

In a real (Itanium) compiler

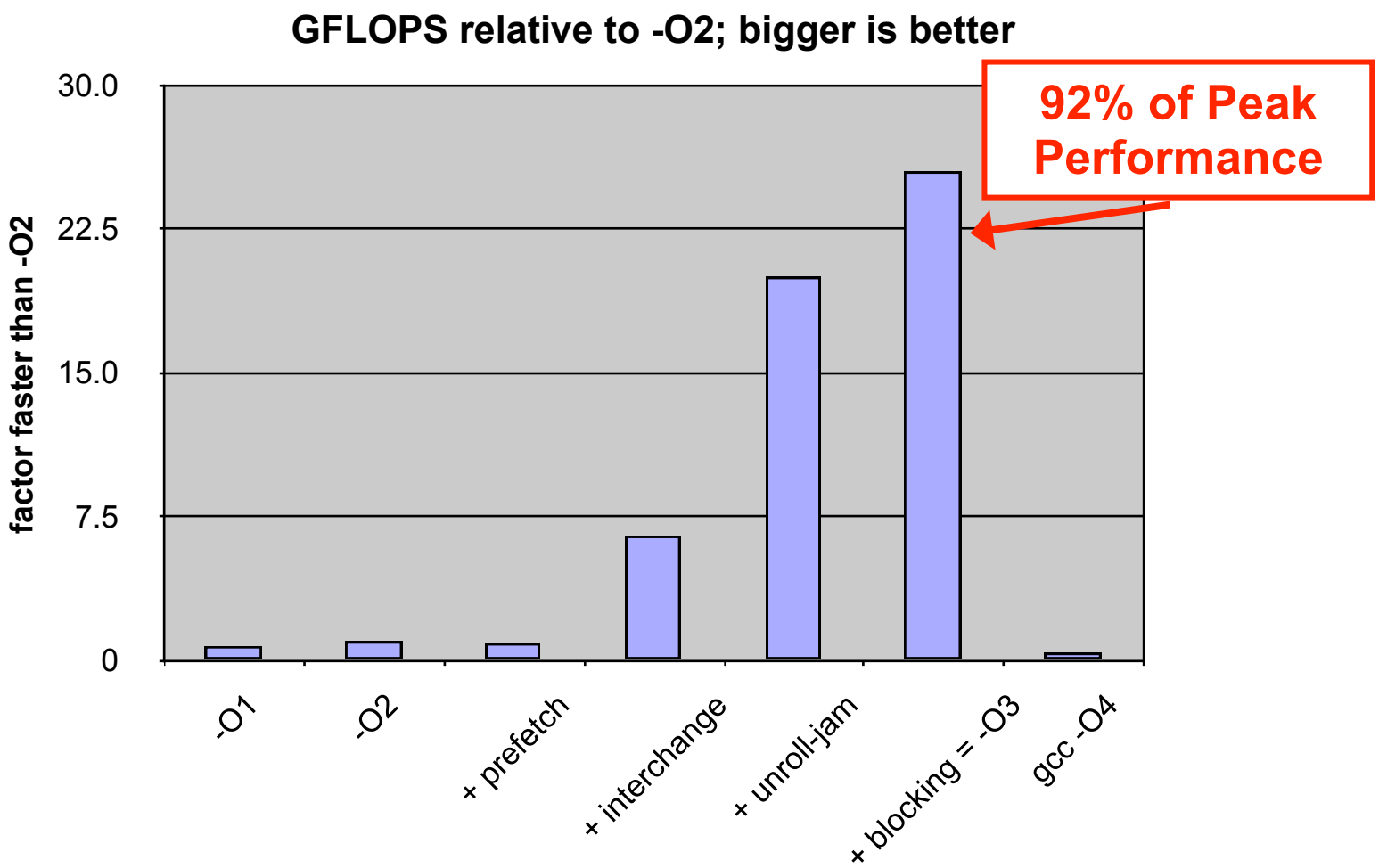

Loop transformations

- Loop transformations can have dramatic effects on performance
- Doing this legally and automatically is very difficult!
- Researchers have developed techniques to determine legality of loop transformations and automatically transform the loop
  - Techniques like *unimodular transform framework* and *polyhedral framework*
  - These approaches will get covered in more detail in advanced compilers course