More Dataflow Analysis

Steps to building analysis

- Step 1: Choose lattice
- Step 2: Choose direction of dataflow (forward or backward)
- Step 3: Create monotonic transfer function
- Step 4: Choose *confluence* operator (*i.e.*, what to do at merges)
  - Either join or meet in the lattice
- Let's walk through these steps for a new analysis

Liveness analysis

- Which variables are live at a particular program point?
- Used all over the place in compilers
  - Register allocation
  - Loop optimizations

Choose lattice

- What do we want to know?
  - At each program point, want to maintain the set of variables that are live
  - Lattice elements: sets of variables
  - Natural choice for lattice: powerset of variables!

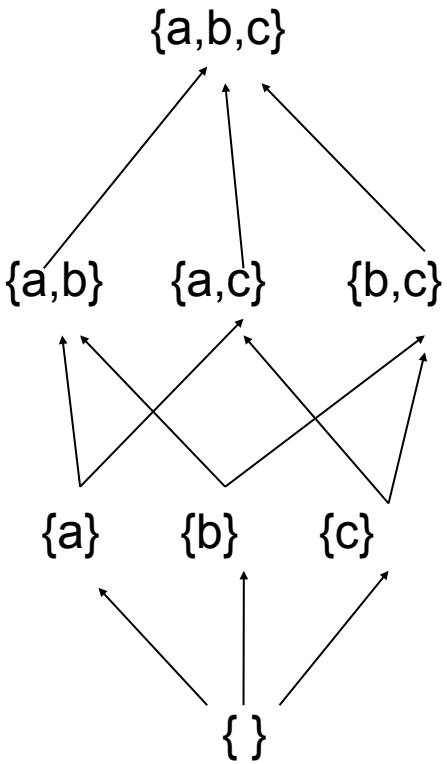

Choose dataflow direction

- A variable is *live* if it is used later in the program without being redefined
  - At a given program point, we want to know information about what happens later in the program
  - This means that liveness is a *backwards* analysis
    - Recall that we did liveness backwards when we looked at single basic blocks

Create x-fer functions

- What do we do for a statement like:

  x = y + z

- If x was live "before" (i.e., live after the statement), it isn't now (i.e., is not live before the statement)
- If y and z were not live "before," they are now
- What about:

  x = x

Create x-fer functions

- Let's generalize
- For any statement s, we can look at which live variables are *killed*, and which new variables are made live (*generated*)
- Which variables are killed in s?
  - The variables that are *defined* in s: DEF(s)
- Which variables are made live in s?
  - The variables that are *used* in s: USE(s)
- If the set of variables that are live after s is X, what is the set of variables live before s?

$$T_s(X) = \mathbf{use}(s) \cup (X - \mathbf{def}(s))$$

- Is this monotonic?

Dealing with aliases

- Aliases, as usual, cause problems
- Consider

```
int x, y
int *z, *w;
if (...) z = &y else z = &x
if (...) w = &y else w = &x
*z = *w; //which variable is defined? which is used?
```

- What should USE(*z = *w) and DEF(*z = *w) be?
  - Keep in mind: the goal is to get a list of variables that *may* be live at a program point
- For now, assume there is no aliasing

Dealing with function calls

- Similar problem as aliases:

```
int foo(int &x, int &y); //pass by reference!

void main() {
  int x, y, z;
  z = foo(x, y);
}
```

- Simple solution: functions can do *anything* – redefine variables, use variables
  - So DEF(foo()) is { } and USE(foo()) is V
- Real solution: *interprocedural* analysis, which determines what variables are used and defined in foo

Choose confluence operator

- What happens at a merge point?
  - The variables live in to a merge point are the variables that are live along *either* branch
  - Confluence operator: Set union (⊔) of all live sets of outgoing edges

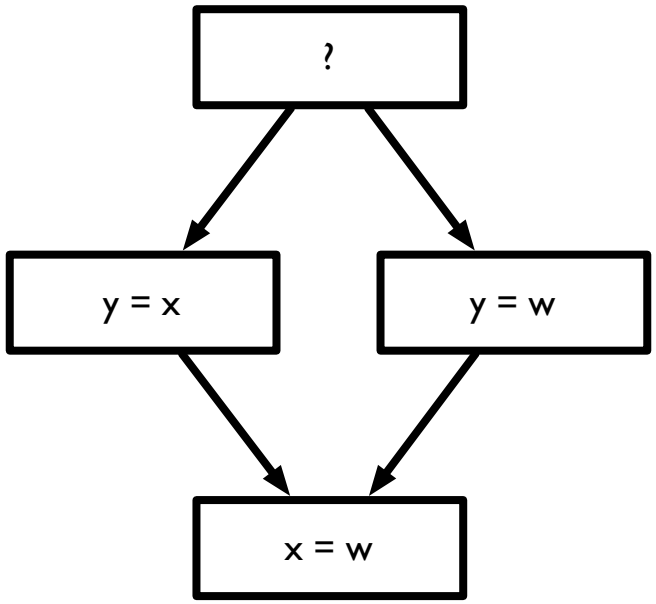

$$T_{merge} = \bigcup_{X \in succ(merge)} X$$

How to initialize analysis?

- At the end of the program, we know no variables are live
  → value at exit point is { }
  - What about if we're analyzing a single function? Need to make conservative assumption about what may be live
- What about elsewhere in the program?
  - We should initialize other sets to { }
    - This is consistent with our approach to finding the least fixpoint

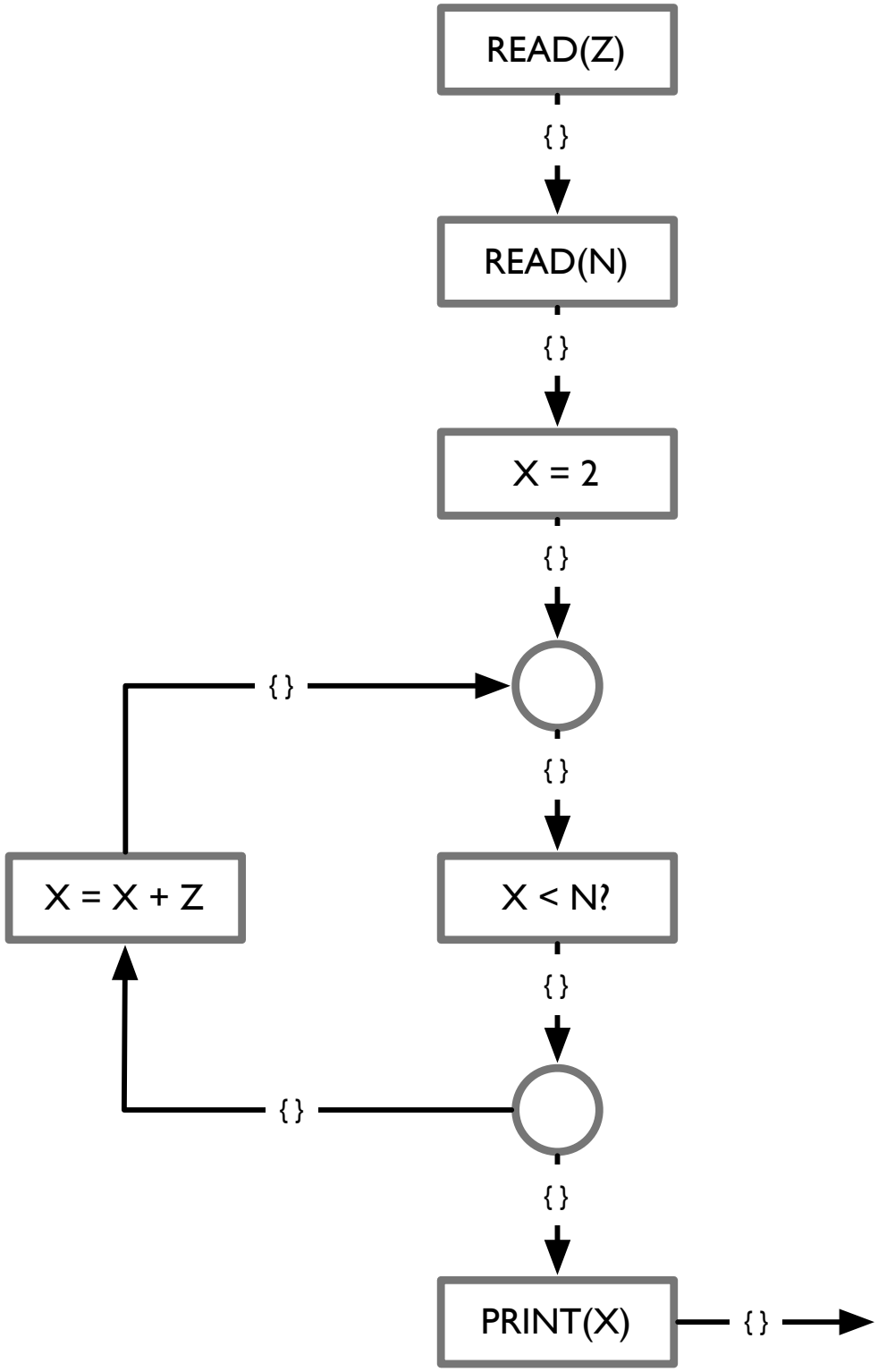
READ(Z)
{ }
READ(N)
{ }
X = 2
{ }
{ }
{ }
X = X + Z
X < N?
{ }
{ }
{ }
PRINT(X)
{ }

An alternate approach

- Dataflow analyses like live-variable analysis are *bit-vector* analyses: are even more structured than regular dataflow analysis
  - Consistent lattice: powerset
  - Consistent transfer functions
- Many sources only talk about bitvector dataflow

Bit-vector lattices

- Consider a single element, V, of the powerset(S) lattice
- Each item in S either appears in V or does not: can represent using a single bit
  - Can represent V as a *bit vector*
    - {a, b, c} = <1, 1, 1>
    - { } = <0, 0, 0>
    - {b, c} = <0, 1, 1>
- $\sqcup$ and $\sqcap$ (which are just $\cup$ and $\cap$) are simply bitwise $\vee$ and $\wedge$, respectively

Eliminating merge nodes

- Many dataflow presentations do not use explicit merge nodes in CFG
- How do we handle this?
- Problem: now a node may be a statement *and* a merge point
- Solution: compose confluence operator and transfer functions
- Note: non-merge nodes have just one successor; this equation works for all nodes!

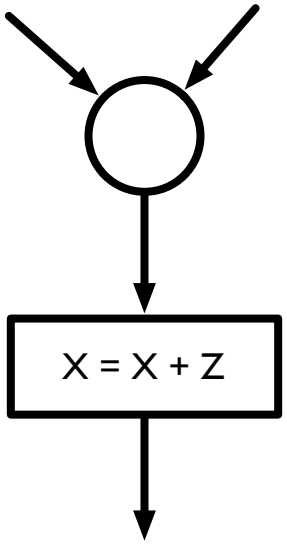

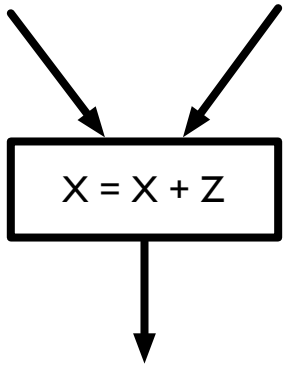

$$T(s) = \mathbf{use}(s) \cup ((\bigcup_{X \in succ(s)} X) - \mathbf{def}(s))$$

Simplifying matters

$$T(s) = \mathbf{use}(s) \cup ((\bigcup_{X \in succ(s)} X) - \mathbf{def}(s))$$

- Lets split this up into two different sets
  - OUT(s): the set of variables that are live *immediately after* a statement is executed
  - IN(s): the set of variables that are live *immediately before* a statement is executed

$$\begin{aligned} IN(s) &= \mathbf{use}(s) \cup (OUT(s) - \mathbf{def}(s)) \\ OUT(s) &= \bigcup_{t \in succ(s)} IN(t) \end{aligned}$$

Generalizing

- USE(s) are the variables that become live due to a statement—they are *generated* by this statement
- DEF(s) are the variables that stop being live due to a statement—they are *killed* by this statement

$$
\begin{aligned}
IN(s) &= \mathbf{gen}(s) \cup (OUT(s) - \mathbf{kill}(s)) \\
OUT(s) &= \bigcup_{t \in succ(s)} IN(t)
\end{aligned}
$$

Bit-vector analyses

- A bit-vector analysis is any analysis that
  - Operates over the powerset lattice, ordered by ⊆ and with ∪ and ∩ as its meet and join
  - Has transfer functions that can be written in the form:

$$\begin{aligned} IN(s) &= \mathbf{gen}(s) \cup (OUT(s) - \mathbf{kill}(s)) \\ OUT(s) &= \bigcup_{t \in succ(s)} IN(t) \end{aligned}$$

  - Are these transfer functions monotonic? (Hint: if *f* and *g* are monotonic, is $f \circ g$ monotonic?)
  - gen and kill are dependent on the statement, but not on IN or OUT
- Things are a little different for forward analyses, and some analyses use ∩ instead of ∪

Reaching definitions

- What definitions of a variable *reach* a particular program point
  - A definition of variable x from statement s reaches a statement t if there is a path from s to t where x is not redefined
- Especially important if x is used in t
  - Used to build *def-use* chains and *use-def* chains, which are key building blocks of other analyses
    - Used to determine dependences: if x is defined in s and that definition reaches t then there is a flow dependence from s to t
  - We used this to determine if statements were loop invaraint
    - All definitions that reach an expression must originate from outside the loop, or themselves be invariant

Creating a reaching-def analysis

- Can we use a powerset lattice?
- At each program point, we want to know which definitions have reached a particular point
  - Can use powerset of set of definitions in the program
    - V is set of variables, S is set of program statements
    - Definition: $d \in V \times S$
      - Use a tuple, <v, s>
  - How big is this set?
    - At most $|V \times S|$ definitions

Forward or backward?

- What do you think?

Choose confluence operator

- Remember: we want to know if a definition *may* reach a program point
- What happens if we are at a merge point and a definition reaches from one branch but not the other?
  - We don't know which branch is taken!
  - We should union the two sets – any of those definitions can reach
- We want to avoid getting too many reaching definitions → should start sets at $\perp$

Transfer functions for RD

- Forward analysis, so need a slightly different formulation
  - Merged data flowing into a statement

$$
\begin{aligned}
IN(s) &= \bigcup_{t \in pred(s)} OUT(t) \\
OUT(s) &= \mathbf{gen}(s) \cup (IN(s) - \mathbf{kill}(s))
\end{aligned}
$$

- What are gen and kill?
  - gen(s): the set of definitions that *may* occur at s
    - e.g., gen(s_1: x = e) is <x, s_1>
  - kill(s): all previous definitions of variables that are *definitely* redefined by s
    - e.g., kill(s_1: x = e) is <x, *>

Available expressions

- We've seen this one before
- What is the lattice? powerset of all expressions appearing in a procedure
- Forward or backward?
- Confluence operator?

Transfer functions for meet

- What do the transfer functions look like if we are doing a meet?

$$
\begin{aligned}
IN(S) &= \cap_{t \in pred(s)} OUT(t) \\
OUT(S) &= \mathbf{gen}(s) \cup (IN(S) - \mathbf{kill}(s))
\end{aligned}
$$

- gen(s): expressions that *must be* computed in this statement
- kill(s): expressions that use variables that *may* be defined in this statement
  - Note difference between these sets and the sets for reaching definitions or liveness
- Insight: gen and kill must never lead to incorrect results
  - Must not decide an expression is available when it isn't, but OK to be safe and say it isn't
  - Must not decide a definition *doesn't* reach, but OK to overestimate and say it does

Analysis initialization

- Remember our formalization
  - If we start with everything initialized to $\bot$, we compute the least fixpoint
  - If we start with everything initialized to $\top$, we compute the greatest fixpoint
- Which do we want? It depends!
  - Reaching definitions: a definition that *may* reach this point
    - We want to have as few reaching definitions as possible $\rightarrow$ use least fixpoint
  - Available expressions: an expression that *was definitely* computed earlier
    - We want to have as many available expressions as possible $\rightarrow$ use greatest fixpoint
  - Rule of thumb: if confluence operator is $\sqcup$, start with $\bot$, otherwise start with $\top$

Analysis initialization (II)

- The set at the entry of a program (for forward analyses) or exit of a program (for backward analyses) may be different
  - One way of looking at this: start statement and end statement have their own transfer functions
- General rule for bitvector analyses: no information at beginning of analysis, so first set is always { }

Very busy expressions

- An expression is *very busy* if it is computed on *every path* that leads from a program point
  - Why does this matter?
  - Can calculate very busy expressions early without wasting computation (since the expression is used at least once on every outgoing path) – this can save space
  - Good candidates for loop invariant code motion

Very busy expressions

- Lattice?
- Direction?
- Confluence operator?
- Initialization?
- Transfer functions?
  - Gen? Kill?