ECE 544 : Digital Communications (Session 30)

Recall: Were working on M-ary signalling with orthogonal signals

$$H_i : \underline{Y} = \underline{s_i} + \underline{N}$$

$$0 \le i \le M-1$$

$$* \quad \underline{s_i}^T \underline{s_j} = \begin{cases} 0 & i \ne j \\ \|\underline{s_i}\|^2 = \|\underline{s_0}\|^2 & i = j \end{cases}$$

$$* \quad \underline{N} \sim N(\underline{0}, \sigma^2 \underline{I})$$

For unif. costs and equal priors, the Bayes receiver is the ML receiver and it can be characterized by decision regions

$$\Gamma_i = \left\{ \underline{y} : \|\underline{y} - \underline{s_i}\|^2 = \min_k \|\underline{y} - \underline{s_k}\|^2 \right\}$$

$$= \left\{ \underline{y} : \underline{s_i}^T \underline{y} = \max_k \underline{s_k}^T \underline{y} \right\}$$

$$P_e = P\left(\left\{\begin{matrix}\text{a symbol}\\ \text{error occurs}\end{matrix}\right\}\right) = \frac{1}{M}\sum_{i=0}^{M-1} P_i(Y \in \Gamma_i^c)$$

Then $$P_i(Y \in \Gamma_i^c) = 1 - P_i(Y \in \Gamma_i)$$

$$= 1 - P_i\left(\underline{s}_i^T \underline{Y} > \max_{k \neq i} \underline{s}_k^T \underline{Y}\right)$$

<u>Fact</u>: Under H_i

$$\underline{s}_0^T \underline{Y},\ \underline{s}_1^T \underline{Y},\ \ldots,\ \underline{s}_{M-1}^T \underline{Y}$$

are indep., Gaussian with

$$\underline{s}_j^T \underline{Y} \sim \begin{cases} N(0, \sigma^2 \|\underline{s}_0\|^2) & j \neq i \\ N(\|\underline{s}_0\|^2, \sigma^2 \|\underline{s}_0\|^2 & j = i \end{cases}$$

<u>Lemma</u> $U \perp\!\!\!\perp V$

$$P(U < V) = \int_{-\infty}^{\infty} P(U < v)\, f_V(v)\, dv$$

<u>Re</u>: $P_i\left(\max_{k \neq i} \underline{s}_k^T \underline{Y} < \underline{s}_i^T \underline{Y}\right)$

$$= \int_{-\infty}^{\infty} \underbrace{P_i\left(\max_{k \neq i} \underline{s}_k^T \underline{Y} < z\right)} \frac{1}{\sqrt{2\pi}\,\sigma \|\underline{s}_0\|} e^{-(z - \|\underline{s}_0\|^2)^2 / 2\sigma^2 \|\underline{s}_0\|^2} dz$$

$$= P_i\left(\bigcap_{k \neq i} \{\underline{s}_k^T \underline{Y} < z\}\right) = \prod_{k \neq i} P_i\left(\underline{s}_k^T \underline{Y} < z\right) = \prod_{k \neq i} \Phi\left(\frac{z}{\sigma \|\underline{s}_0\|}\right) = \left[\Phi\left(\frac{z}{\sigma \|\underline{s}_0\|}\right)\right]^{M-1}$$

Note that $P_i(Y \notin \Gamma_i)$ does not depend on i. Thus sub into formula for P_e to get:

$$P_e = 1 - \frac{1}{\sqrt{2\pi}} \int_{-\infty}^{\infty} \left[\Phi(x)\right]^{M-1} e^{-(x-d)^2/2} \, dx$$

made a change of variables

$x = z/\sigma\|\underline{s}_0\|$; $d = \|\underline{s}_0\|/\sigma$

Equivalent to MBP Eq. (6.71).

Students Should Read

Sec. 6.7 "Offset 2D Mods"

6.8 "BW Comparisons"

6.9 "Continuous Phase Modulation"

MBP Ch 7 Non-Coherent Communications

- phase of received sig. <u>not</u> known to receiver <u>and</u> no attempt is made to estimate it.
- Some signals are useless in this context — BBSK, QPSK, 16 QASK, 8-PSK.
- Start with binary

$$s_0(t) = \sqrt{2}\,A\,a_0(t)\cos\left[\omega_c t + \theta_0(t) + \phi_0\right] p_T(t)$$

vs.

$$s_1(t) = \sqrt{2}\,A\,a_1(t)\cos\left[\omega_c t + \theta_1(t) + \phi_1\right] p_T(t)$$

BB amplitude mod.

BB phase mod.

receiver has no knowledge. Often model as realizations of indep unif. $[0, 2\pi)$ r.v.s.

<u>Example 1</u> Binary Freq. Shift Keying (BFSK)

$$a_0(t) = a_1(t) = 1$$

$$\theta_0(t) = (\omega_0 - \omega_c)t \longrightarrow s_0(t) = \sqrt{2}A\cos\left[\omega_0 t + \phi_0\right] p_T(t)$$

$$\theta_1(t) = (\omega_1 - \omega_c)t \longrightarrow s_1(t) = \sqrt{2}A\cos\left[\omega_1 t + \phi_1\right] p_T(t)$$

<u>Fact</u>: $\omega_i T$ mult. of 2π $\quad i = 0,1$ then the BFSK signals are orthogonal & have equal energy.

$$\langle s_0, s_1 \rangle = 0$$

$$\underset{\|s_0\|^2}{\langle s_0, s_0 \rangle} = \underset{\|s_1\|^2}{\langle s_1, s_1 \rangle} = A^2 T$$

Example 2 Orthog. AM

$$\theta_0(t) = \theta_1(t) = 0$$

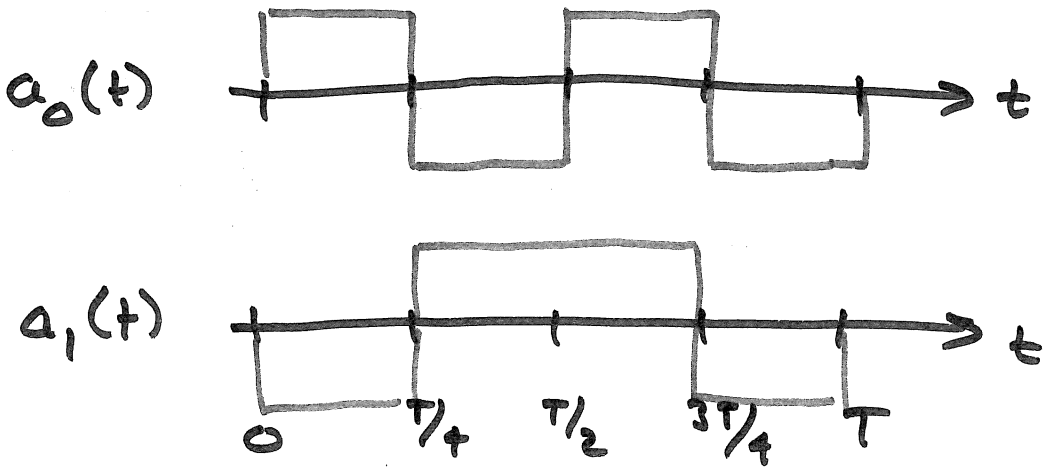

Front End for Any Optimal Receiver for a Binary Noncoherent Signalling Problem

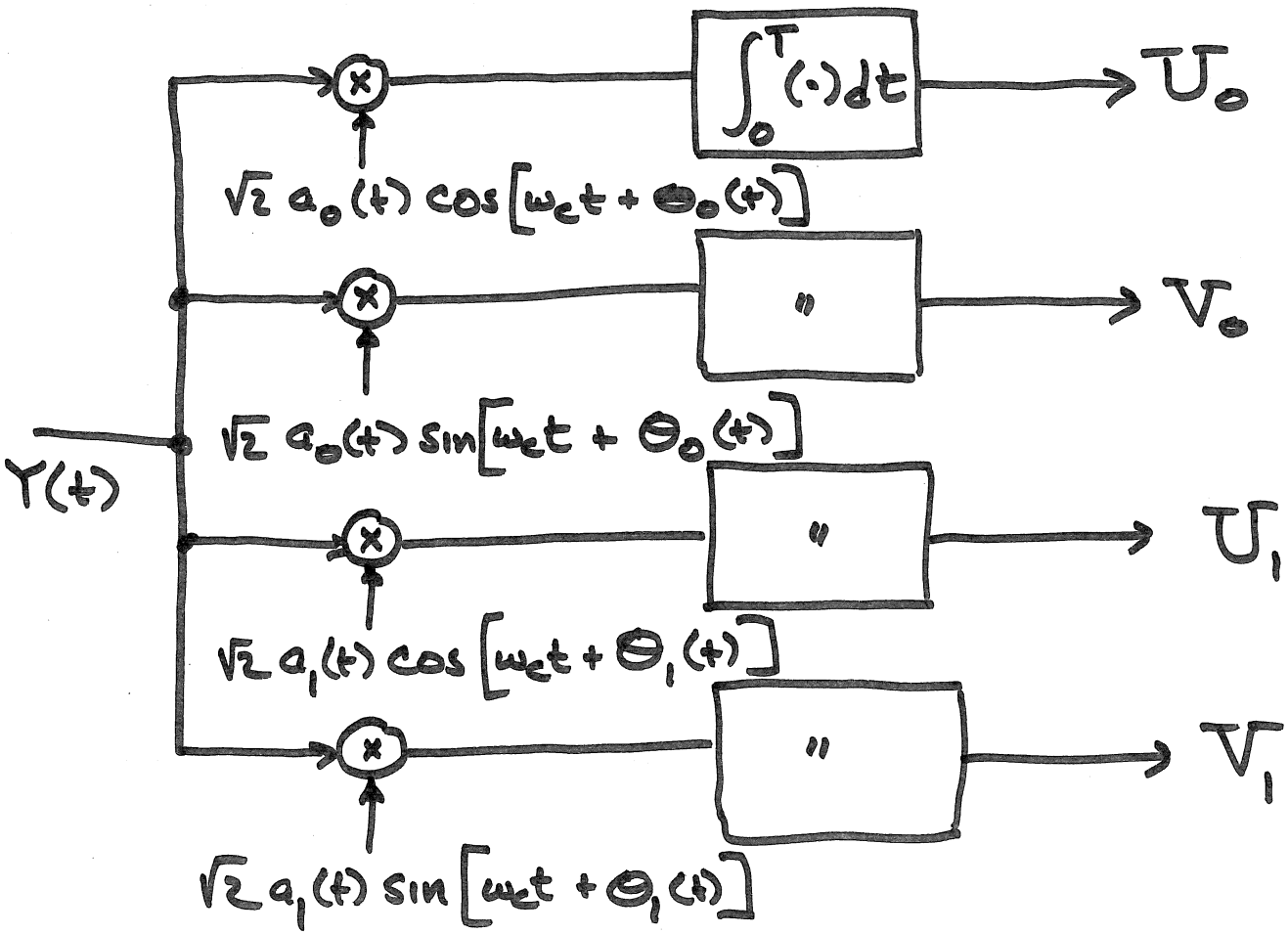

* Seems that non-coh. case needs 4 correlators whereas only 2 (or even 1) needed for coherent.

* Why?

<u>What we really need show</u>: That the r.v.s. U_0, V_0, U_1, V_1 are a suff. statistic for binary test (and are they <u>minimal</u> <u>sufficient</u>).

Sufficiency: All signals we could ever possibly see are in span of the 4 mixer inputs in the correlator bank. It's trivial actually $\longrightarrow$

$$S_i(t) = \sqrt{2}\, A\, a_i(t) \cos\left[\omega_c t + \theta_i(t) + \phi_i\right]$$

$$= \sqrt{2}\, A\, a_i(t) \left\{ \cos\left[\omega_c t + \theta_i(t)\right] \cos\phi_i - \sin\left[\omega_c t + \theta_i(t)\right] \sin\phi_i \right\}$$

$$= \left(A\cos\phi_i\right) \sqrt{2}\, a_i(t) \cos\left[\omega_c t + \theta_i(t)\right]$$

$$+ \left(-A\sin\phi_i\right) \sqrt{2}\, a_i(t) \sin\left[\omega_c t + \theta_i(t)\right]$$

<u>Note</u> ① Do not require

$$\sqrt{2}\, a_0(t) \cos\left[\omega_c t + \theta_0(t)\right],$$

$$\vdots$$

$$\sqrt{2}\, a_1(t) \sin\left[\omega_c t + \theta_1(t)\right]$$

to be orthog. or linearly indep.

② Possible to use G.S. Procedure to find a smaller dim. basis.

Statistical Characterization of Correlator Outputs

$$Y(t) = S_i(t) + \underbrace{X(t)}_{\text{AWGN, } N_0/2} \qquad i = 0, 1$$

$\Longrightarrow$ For either hypothesis U_0, V_0, U_1, V_1 are jointly Gauss. so char. by ① mean vector, ② 4x4 Cov. matrix.

$$E\{U_j \mid H_i \text{ true}\} =$$

$$(2A\cos\phi_i)\int_0^T a_i(t)\,a_j(t)\,\cos\left[\omega_c t + \theta_i(t)\right]\cos\left[\omega_c t + \theta_j(t)\right]dt$$

$$-\,(2A\sin\phi_i)\int_0^T a_i(t)\,a_j(t)\,\sin\left[\omega_c t + \theta_i(t)\right]\cos\left[\omega_c t + \theta_j(t)\right]dt$$

$i = 0,1$
$j = 0,1$

$$E\{V_j \mid H_i \text{ true}\} =$$

$$(2A\cos\phi_i)\int_0^T a_i(t)\,a_j(t)\,\cos\left[\omega_c t + \theta_i(t)\right]\sin\left[\omega_c t + \theta_j(t)\right]dt$$

$$-\,(2A\sin\phi_i)\int_0^T a_i(t)\,a_j(t)\,\sin\left[\omega_c t + \theta_i(t)\right]\sin\left[\omega_c t + \theta_j(t)\right]dt$$

$i = 0,1$
$j = 0,1$

Total = 8 numbers; 4 for each of the two hypotheses.