7.6 The noncoherent communication receiver of Figure 7-4 is to be used for a packet radio communication system. Each packet consists of N binary digits that are transmitted using binary FSK modulation. The transmission rate is $1/T$ bits/s. In the absence of fading, the received signal for the nth binary digit is given by

$$s(t) = \sqrt{2}\,A\cos(\omega_i t + \varphi_i), \quad nT \le t < (n+1)T,$$

for $i = 0$ (if 0 is sent) or $i = 1$ (if 1 is sent). Assume that $\omega_0 \neq \omega_1$ and that ω_0 and ω_1 are multiples of $2\pi/T$. The front end of the receiving radio adds white Gaussian noise $X(t)$ of spectral density $N_0/2$ to the received signal, so the input to the receiver is $Y(t) = s(t) + X(t)$.

(a) In the absence of fading, A is just a deterministic constant. What is the probability of bit error for this receiver? What is the probability of packet error for this receiver? Answer in terms of A and the other parameters given.

(b) Give a high signal-to-noise ratio approximation to the packet error probability of part **(a)**.

(c) For a particular fading channel, the parameter A is constant over the packet, but it is a random variable that has a Gaussian distribution with mean 0 and variance β^2. Find the average bit error probability for this channel and receiver (average over the amplitudes of the received signal).

(d) In this part, the packet is deemed unacceptable if its bit error probability exceeds a specified probability p. Find an expression for the outage probability, which is the probability that the amplitude A is such that the given packet is unacceptable. Simplify as much as possible.

(e) Consider the same receiver, but a different fading channel that also distorts the pulse shape. The received signal is now of the form

$$s(t) = \sqrt{2}\,A\sin(\pi t/T)\cos(\omega_i t + \varphi_i), \quad nT \le t < (n+1)T.$$

Assume that $T^{-1} \ll |\omega_1 - \omega_0| < \omega_0 < \omega_1$, so that, among other implications, double-frequency terms can be ignored and the signals are orthogonal. Find the average probability of bit error if the amplitude A is as described in part **(c)**.

MBP 7.6

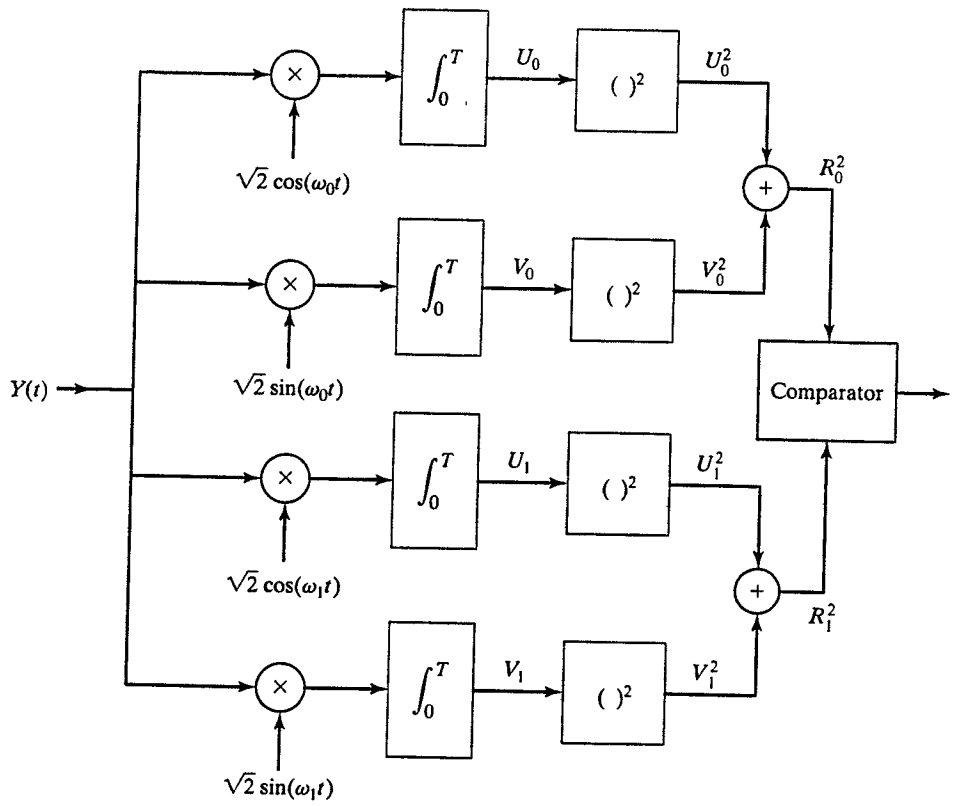

Figure 7-4: Optimum receiver for noncoherent BFSK communications.

Each packet consists of N binary digits sent via BFSK with

$$S_i(t) = \sqrt{2}\, A \cos(\omega_i t + \varphi_i) \quad nT \le t < (n+1)T$$

and using the optimal non-coh. receiver arch. above. The transmission and reception of individual bits are indep.

All the standard assumptions for BFSK hold.

(a) A is a deterministic constant. Find prob. of a bit error.

We assume bits are equally likely. Prob. is also symm. in sense that

$$P_{e,0} = P_{e,1} = P_e = \frac{1}{2} e^{-A^2T/2N_0} \triangleq P_b$$

prob. of a bit error.

A packet is received correctly iff all N bits are received correctly.

$$\text{Prob of packet correct} = (1-P_b)^N$$

$$\text{Prob of packet error} = P_{e,\,packet} = 1-(1-P_b)^N$$

$$= 1-\left(1-\tfrac{1}{2}e^{-A^2T/2N_0}\right)^N$$

(b) If SNR is high then P_b is small. Hence

$$(1-P_b)^N \approx 1-NP_b$$

$$\Longrightarrow P_{e,\,packet} \approx NP_b = \frac{N}{2}e^{-A^2T/2N_0}$$

(c) Fading channel model where A is constant over a packet but varying independly from packet to packet as

$$A \sim N(0,\beta^2)$$

Want the average bit error prob. over the transmission of many packets.

$$\Longrightarrow P_b(a) = \frac{1}{2}e^{-a^2T/2N_0} = \text{conditional prob. of a bit error given } A=a$$

$$\overline{P_b} = \int_{-\infty}^{\infty} P_b(a)\, f_A(a)\, da$$

$$= \int_{-\infty}^{\infty} \frac{1}{2}e^{-a^2T/2N_0}\, e^{-a^2/2\beta^2}\frac{1}{\sqrt{2\pi}\,\beta}\, da$$

The trick for evaluating this is to recognize that the integrand is a scaled version of a Gaussian pdf.

$$\overline{P_b} = \frac{1}{2\beta}\int_{-\infty}^{\infty} \frac{1}{\sqrt{2\pi}} \exp\left[-\frac{a^2}{2}\left(\frac{T}{N_0}+\frac{1}{\beta^2}\right)\right] da$$

Let $\lambda^2 = \left(\frac{T}{N_0}+\frac{1}{\beta^2}\right)^{-1}$ and λ the pos. sq. root.

Then

$$\overline{P_b} = \frac{\lambda}{2\beta}\int_{-\infty}^{\infty} \frac{1}{\sqrt{2\pi}\,\lambda} e^{-a^2/2\lambda}\, da = \frac{\lambda}{2\beta}$$

$$= \frac{1}{2\beta\sqrt{\frac{T}{N_0}+\frac{1}{\beta^2}}} = \frac{1}{2}\sqrt{\frac{N_0}{\beta^2 T + N_0}} = \frac{1}{2}\sqrt{\frac{1}{1+(\beta^2 T/N_0)}}$$

$$= \frac{1}{2}\sqrt{\frac{1}{1+\mathrm{SNR}}} \quad \text{with } \mathrm{SNR} \triangleq \beta^2 T/N_0$$

$$= E\{A^2\}T/N_0$$

(d) Packet said to be "unacceptable" if its bit error prob. exceeds a threshold p. It only makes sense to consider $p < 1/2$.

Define $P_b(a) = \frac{1}{2} e^{-a^2 T/2N_0}$ $\quad -\infty < a < \infty$. The outage event is then defined to be

$$\{P_b(A) > p\}$$

and the outage probability is

$$P_{out} = P(P_b(A) > p) = P\left(\frac{1}{2}e^{-A^2T/2N_0} > p\right)$$

$$= P\left(-\frac{A^2T}{2N_0} > \ln(2p)\right) = P\left(A^2 < \frac{2N_0}{T}\ln\left(\frac{1}{2p}\right)\right)$$

$$P_{out} = P\left(-\frac{\sqrt{\frac{2N_0}{T}\ln\left(\frac{1}{2p}\right)}}{\beta} < \frac{A}{\beta} < \frac{\sqrt{\frac{2N_0}{T}\ln\left(\frac{1}{2p}\right)}}{\beta}\right)$$

$$= \Phi\left(\frac{1}{\beta}\sqrt{\frac{2N_0}{T}\ln\left(\frac{1}{2p}\right)}\right) - \Phi\left(-\frac{1}{\beta}\sqrt{\frac{2N_0}{T}\ln\left(\frac{1}{2p}\right)}\right)$$

$$= 2\Phi\left(\frac{1}{\beta}\sqrt{\frac{2N_0}{T}\ln\left(\frac{1}{2p}\right)}\right) - 1$$

(e) Now fading channel also distorts pulse so the new received sig. model is

$$S_i(t) = \sqrt{2}\,A\sin\left(\frac{\pi t}{T}\right)\cos\left(\omega_i t + \varphi_i\right) \quad nT \le t < (n+1)T$$

We solved this as part of MBP 7.4. Found there that

$$P_b(A) = \frac{1}{2}e^{-2A^2T/\pi^2 N_0}$$

Thus in all prev. expressions we replace T by

$$T' = 4T/\pi^2$$

we will get the correct probs for this part.

$$\overline{P_b}' = \frac{1}{2}\sqrt{\frac{1}{1+(\beta^2 4T/\pi^2 N_0)}}$$

7.9 Compare the required $\mathcal{E}/N_0$ to the nearest tenth of a dB for coherent reception of BPSK, differentially coherent detection of DBPSK, and noncoherent detection of BFSK if the bit error probability for each is to be 10^{-6}. Use $Q\left(\sqrt{2\,\mathcal{E}/N_0}\right) = 10^{-6}$ for $(\mathcal{E}/N_0)_{\text{dB}} = 10.5$ dB. You get to use your calculators for this one!

MBP 7.9

Target BEP 10^{-6}

BPSK requires $E_b/N_0 \approx 10.5$ dB

non coh. BFSK

$$P_e = 0.5\, e^{-E_b/2N_0} \overset{\text{Set}}{=} 10^{-6}$$

$$\Longrightarrow \frac{E_b}{N_0} \approx 26.25 \approx 14.2 \text{ dB}$$

DBPSK

$$P_e = 0.5\, e^{-E_b/N_0}$$

$$\Longrightarrow \frac{E_b}{N_0} \approx 13.13 \approx 11.2 \text{ dB.}$$

7.13 Consider a noncoherent BFSK communication system with the receiver of Figure 7-18. Let $\omega_i = 2\pi f_i$ and $g_i(t) = p_T(t)$ for $i = 0$ and $i = 1$. The signals are of the form

$$s_i(t) = \sqrt{2}\, A \cos(2\pi f_i t + \varphi_i)\, p_T(t),$$

for each value of i. The signal $s_0(t)$ is referred to as the *mark* signal, and $s_1(t)$ is called the *space* signal. Assume that the two signals are orthogonal.

Suppose that thermal noise is negligible in this system, and the only noise that affects the performance of the noncoherent receiver is *bandlimited* white Gaussian noise with two-sided spectral density $N_I/2$. This noise may be present at none, one, or both of the frequencies used for the two signals. The bandwidth of this noise is sufficiently large that, when it is present at a given frequency, it produces the same effect on the corresponding branch of the receiver as white Gaussian noise would produce; however, the frequencies f_0 and f_1 are sufficiently far apart that the presence of noise at frequency f_0 does not affect the space filter, and the presence of noise at frequency f_1 does not affect the mark filter. In addition, the noise processes at the two frequencies are statistically independent.

The presence or absence of noise at a given frequency is a random phenomenon. The probability that noise is present at frequency f_0 is β_0, and the probability that noise is present at frequency f_1 is β_1. The event that noise is present at f_0 is statistically independent of the event that noise is present at f_1.

Give an expression for $P_{e,0}$, the probability that the receiver makes an error given that the mark signal is transmitted. Also, give an expression for $P_{e,1}$, the probability that the receiver makes an error given that the space signal is transmitted. These expressions should be in terms of A, T, N_I, β_0, and β_1.

Explain how to solve the problem if the thermal noise is *not* negligible. A detailed solution is acceptable, but not required. It is sufficient to describe the steps needed to obtain a solution.

MBP 7.13

Figure 7-18 is an envelope detector implementation of a non-coherent receiver

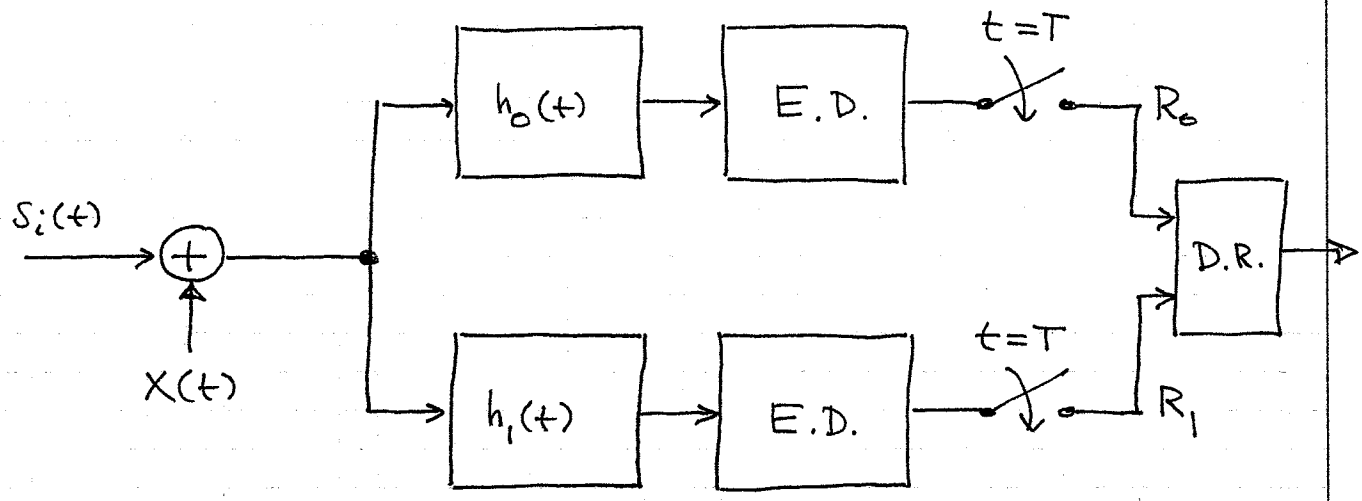

$S_i(t) = \sqrt{2} A \cos(2\pi f_i t + \varphi_i)\, p_T(t)$ and assume the two $(i=0,1)$ signals are orthogonal.

Other assumptions:

1. thermal noise is negligible.
2. additive noise is due to interference but is well modeled as a bandlimited Gauss. noise with psd height $N_I/2$.
   - this noise may be present at none, one, or both of the freqs. f_0, f_1
   - when present it produces the same effect as a white noise would.
   - noise present at f_0 does not influence outp. of h_1; noise pres. at f_1 does not influence h_0.
   - noise proc. at the two freqs. stat. indep.
3. $P\left(\text{noise present at } f_0\right) = \beta_0$ Two events are indep.

   $P\left(\text{noise present at } f_1\right) = \beta_1$

$h_i(t) = 2\, g_i(t) \cos(\omega_i t) \quad i = 0, 1 \qquad g_i(t) = p_T(t)$

Therefore the filters preceeding the E.D.s are

$$h_0(t) = 2\, p_T(t) \cos(2\pi f_0 t)$$

$$h_1(t) = 2\, p_T(t) \cos(2\pi f_1 t).$$

We want to map this ED noncoherent receiver to an equivalent non-coherent correlator as described in MBP Sect. 7.8. Then we can use the prob. of error formulas prev. derived.

Lets model the operation of the ED as follows:

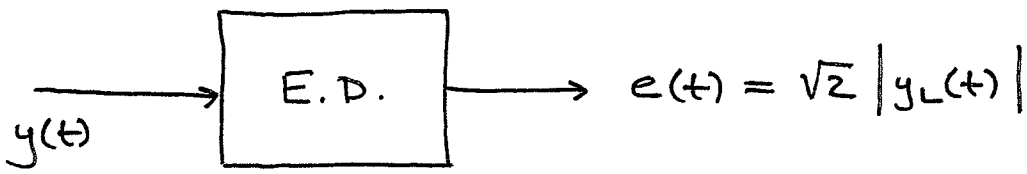

where we assume the input $y(t)$ is real-valued and narrow band so that its complex envelope wrt either f_0 or f_1 has the same magnitude (see notes following).

Now the bandpass filtering effect of $h_0(t)$ can be implemented at baseband

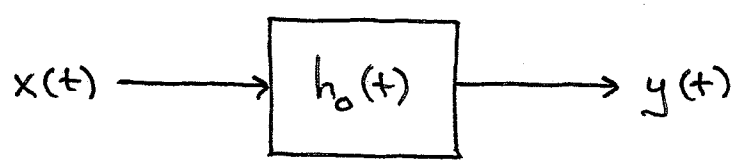

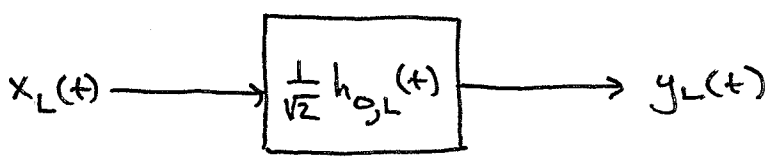

where these complex envelopes are wrt f_0. This means that the following are equivalent.

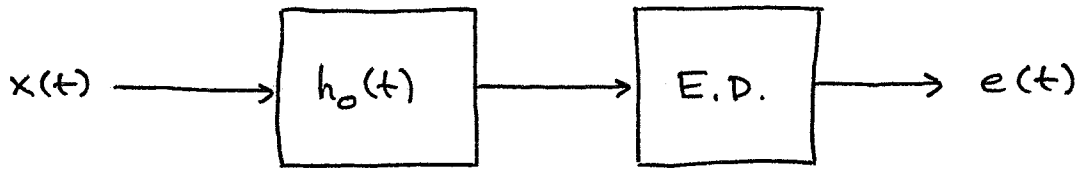

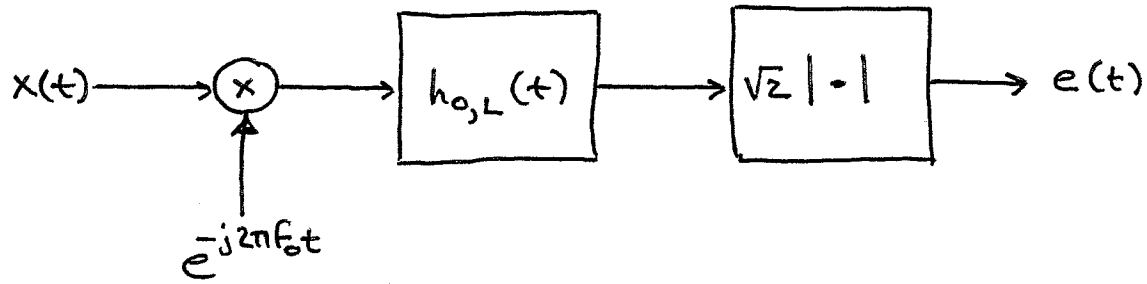

The complex envelope of $h_o(t)$ wrt f_o is approx. equal to

$$h_{o,L}(t) \approx \sqrt{2}\, p_T(t)$$

according to my def. of complex envelope. Thus the top branch of the E.D. can be written

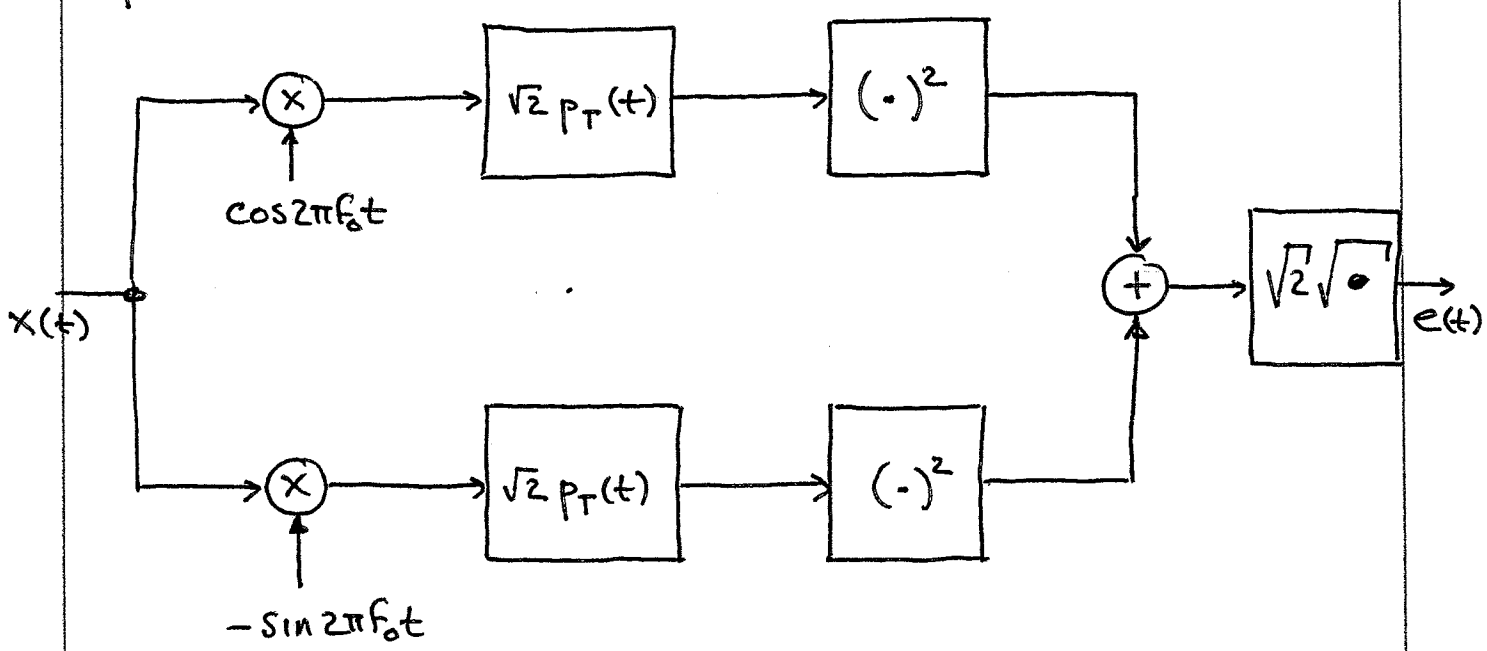

We sample e(t) at $t=T$. Also, the $\sqrt{2}$ factors can be put together and the "−" sign in front of $\sin 2\pi f_o t$ can be omitted. Thus (with same arg. for the f_1 branch)

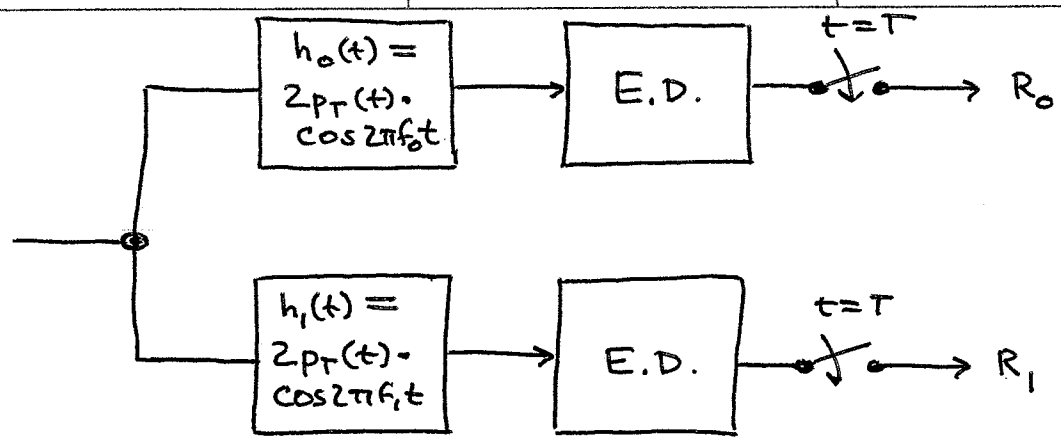

||| (equiv. to)

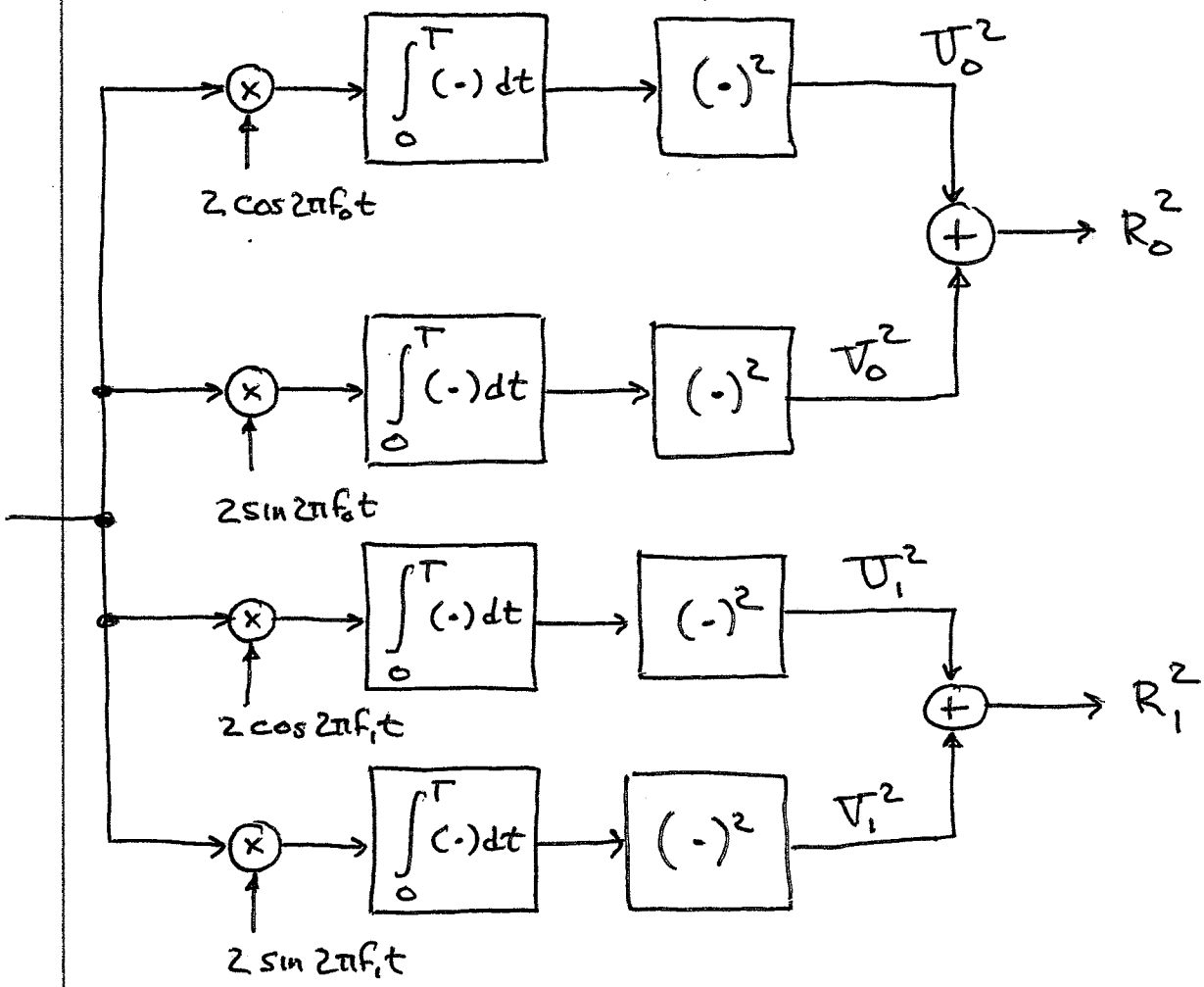

Now base the solution to the problem on this already analyzed structure.

Now the problem itself.

Define random variables I_0 and I_1 with interp.

$$I_0 = \begin{cases} 0 & \text{no interference present at } f_0 \\ 1 & \text{interference} \quad " \quad " \quad " \end{cases}$$

$$I_1 = \begin{cases} 0 & \text{no interference present at } f_1 \\ 1 & \text{interference} \quad " \quad " \end{cases}$$

$$P(I_0 = 1) = \beta_0 \qquad P(I_0 = 0) = 1 - \beta_0 \qquad I_0 \perp\!\!\!\perp I_1$$
$$P(I_1 = 1) = \beta_1 \qquad P(I_1 = 0) = 1 - \beta_1$$

Suppose signal $s_0 = \sqrt{2}\, A \cos(2\pi f_0 t + \varphi_0)\, p_T(t)$ is trans.
Define

$$P_{e,0}(i,j) = P\left(\begin{matrix} \text{receiver chooses} \\ s_1 \end{matrix} \,\middle|\, s_0 \text{ trans.}, I_0 = i, I_1 = j \right)$$

We assume the receiver's decision rule is

$$R_0^2 \underset{<}{>} R_1^2 \quad \begin{matrix} \longrightarrow \text{ choose } s_0 \\ \longrightarrow \quad " \quad s_1 \end{matrix}$$

Therefore

$$P_{e,0}(i,j) = P\left(R_0^2 < R_1^2 \,\middle|\, s_0 \text{ trans.}, I_0 = i, I_1 = j \right)$$

Clearly

$$P_{e,0} = \sum_{i=0}^{1} \sum_{j=0}^{1} P_{e,0}(i,j)\, P(I_0 = i)\, P(I_1 = j)$$

<u>Calculation of the $P_{e,0}(i,j)$</u>

Recall that we are assuming there is no thermal noise.

$\underline{P_{e,0}(1,1)}$

Input to receiver is

$$Y(t) = s_0(t) + X_0(t) + X_1(t)$$

BL white noise with height $N_I/2$

BL white noise with height $N_I/2$

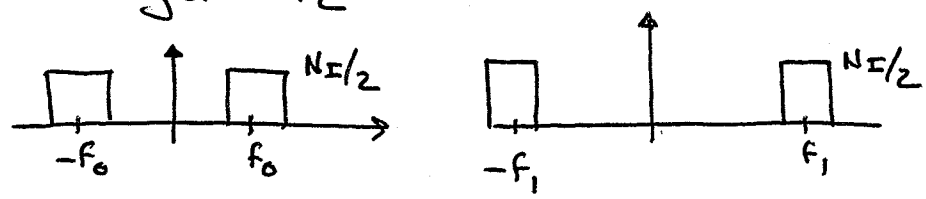

We are assuming that $X_0(t)$ "looks like" AWGN of $N_I/2$ to the f_0 branch and like zero noise to the f_1 branch. Also, $X_1(t)$ looks like AWGN $N_I/2$ to the f_1 branch and zero to the f_0 branch. Random proc. $X_0(t)$ and $X_1(t)$ are indep.

This case looks just like AWGN. Following treatment from notes:

$$U_0 = \alpha_0 \cos\Phi + X_0$$
$$V_0 = -\alpha_0 \sin\Phi + Y_0$$
$$U_1 = X_1$$
$$V_1 = Y_1$$

$$\alpha_0 = 2\sqrt{2}AT/2 = \sqrt{2}AT$$
$$\sigma^2 = \mathrm{Var}(X_0 \text{ or } Y_0 \text{ or } X_1 \text{ or } Y_1) = N_I T$$
$$P_{e,0}(1,1) = \frac{1}{2} e^{-\alpha_0^2/4\sigma^2} = \frac{1}{2} e^{-A^2T/2N_I}$$

$\underline{P_{e,0}(0,0)}$

No noise on either branch. Therefore, $R_1 = 0$ and $R_0 \neq 0$ (since s_0 was transmitted) Hence

$$R_0^2 > R_1^2$$

with prob. one subject to these assumptions

$$\Longrightarrow P_{e,0}(0,0) = 0$$

$\underline{P_{e,0}(1,0)}$

Still have $R_1 = 0 \Longrightarrow P_{e,0}(1,0) = 0.$

$\underline{P_{e,0}(0,1)}$

Input to receiver is

$$Y(t) = s_0(t) + X_1(t)$$

$$\begin{aligned} U_0 &= \alpha_0 \cos\Phi + 0 \\ V_0 &= -\alpha_0 \sin\Phi + 0 \end{aligned} \Longrightarrow R_0^2 = \alpha_0^2 = 2A^2T^2$$

and it is deterministic

$$\begin{aligned} U_1 &= X_1 \\ V_1 &= Y_1 \end{aligned} \Longrightarrow R_1^2 = X_1^2 + Y_1^2$$

sum of iid zero mean Gaussians of var $N_I T$.

Thus

$$P_{e,0}(0,1) = P\left(2A^2T^2 < X_1^2 + Y_1^2\right)$$

$$= 1 - P\left(R_1 < \sqrt{2}AT\right)$$

This was calculated as part of general prob. of error derivation

$$= 1 - \left(1 - e^{-(\sqrt{2}AT)^2/2N_I T}\right)$$

$$= e^{-A^2T/N_I}$$

$$P_{e,0} = P_{e,0}(1,1)\,\beta_0\beta_1 + P_{e,0}(0,1)\,(1-\beta_0)\,\beta_1$$

$$= \beta_1\left[(1-\beta_0)\,e^{-A^2T/N_I} + \frac{\beta_0}{2}\,e^{-A^2T/2N_I}\right]$$

By symmetry

$$P_{e,1} = \beta_0\left[(1-\beta_1)\,e^{-A^2T/N_I} + \frac{\beta_1}{2}\,e^{-A^2T/2N_I}\right].$$

If therm. noise is not negligible all of the $P_{e,0}(i,j)$ will be non zero and so will have four terms.

These will be

$$P_{e,0}(0,0) = \frac{1}{2}\,e^{-A^2T/2N_0}$$

$$P_{e,0}(1,1) = \frac{1}{2}\,e^{-A^2T/2(N_0+N_I)}$$

$$P_{e,0}(0,1) = \frac{N_0+N_I}{2N_0+N_I}\,e^{-A^2T/(2N_0+N_I)}$$

$$P_{e,0}(1,0) = \frac{N_0}{2N_0+N_I}\,e^{-A^2T/(2N_0+N_I)}.$$

What Does an Envelope Detector Do?

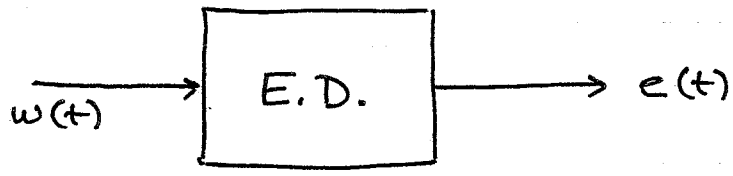

Following MBB's discussion in Sect. 7.8, if the input signal $w(t)$ is a narrowband BP signal expressed as

$$w(t) = \sqrt{2}\, w_I(t) \cos(2\pi f_c t) - \sqrt{2}\, w_Q(t) \sin(2\pi f_c t) \qquad (*)$$

then

$$e(t) = \sqrt{2 w_I^2(t) + 2 w_Q^2(t)} = \sqrt{2}\sqrt{w_I^2(t) + w_Q^2(t)}$$

Envelope detectors are non-coherent and do not directly use information about carrier freq. or phase. They are base on the principal illustrated in the following simple circuit:

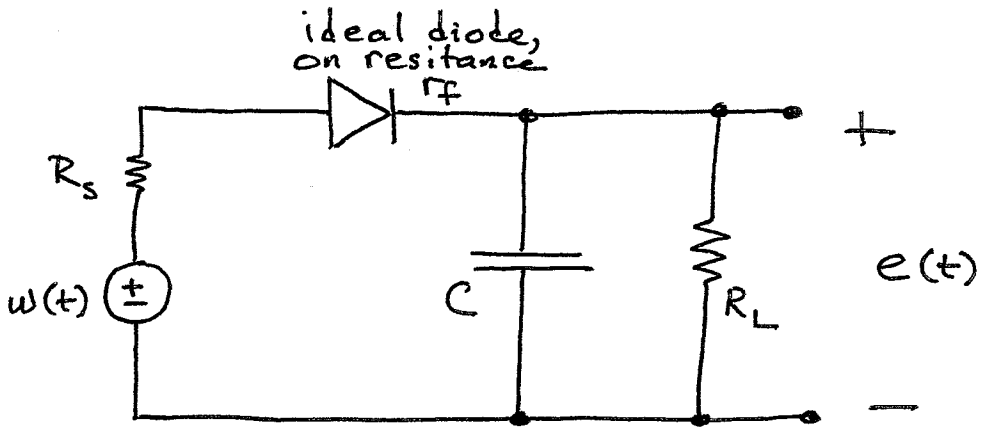

Design constraints for this circuit are examined by cases:

<u>Diode on</u> Cap. charges through equiv. resistance of $(R_s + r_f) \| R_L \approx R_s + r_f$

We want the cap. to follow the carrier on charge up so need charging time const. suff. fast ie

$$(R_s + r_f)C << \frac{1}{f_c}$$

<u>Diode off</u> The cap discharges through R_L. We want the discharging time const. to be much slower than the carrier but yet fast enough to follow the message ie

$$\frac{1}{f_c} << R_L C << \frac{1}{W}$$

Now back to Eq. (*). Suppose the spectrum of $w(t)$ is of the form:

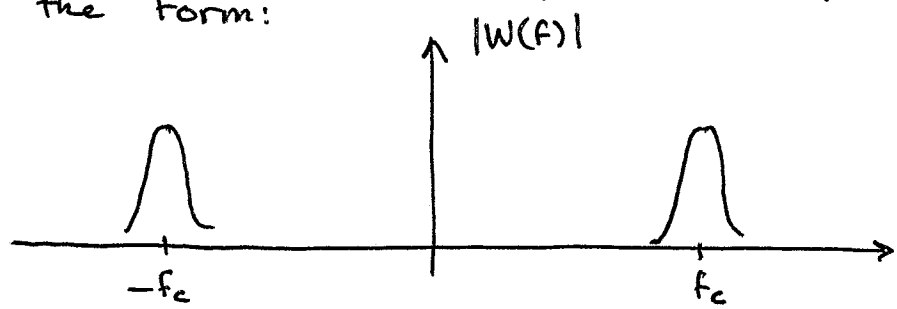

We note that the representation (*) is not unique, and also that ED design works for ranges of carrier freqs and message BWs.

Therefore, the ED output $e(t)$ should not depend on f_c as long as the design equations are satisfied.

There are two ways we can explore this.

<u>Way 1</u> Via trig. identities.

Suppose $f_c' \neq f_c$ but $\Delta f \triangleq f_c - f_c'$ is relatively small. Then by expanding

$$\cos 2\pi f_c t = \cos(2\pi \Delta f t + 2\pi f_c' t)$$
$$= \cos(2\pi \Delta f t)\cos(2\pi f_c' t) - \sin(2\pi \Delta f t)\sin(2\pi f_c' t)$$

$$\sin 2\pi f_c t = \sin(2\pi \Delta f t + 2\pi f_c' t)$$
$$= \sin(2\pi \Delta f t)\cos(2\pi f_c' t) + \cos(2\pi \Delta f t)\sin(2\pi f_c' t)$$

we can rewrite

$$w(t) = \sqrt{2}\left[w_I(t)\cos 2\pi\Delta f t - w_Q(t)\sin 2\pi\Delta f t\right]\cos 2\pi f_c' t$$

$$-\sqrt{2}\left[w_I(t)\sin 2\pi\Delta f t + w_Q(t)\cos 2\pi\Delta f t\right]\sin 2\pi f_c' t$$

$$= \sqrt{2}\, a(t)\cos 2\pi f_c' t - \sqrt{2}\, b(t)\sin 2\pi f_c' t$$

Then note that

$$a^2 + b^2 = w_I^2\cos^2(2\pi\Delta f t) + w_Q^2\sin^2(2\pi\Delta f t)$$

$$- 2 w_I w_Q \cos(2\pi\Delta f t)\sin(2\pi\Delta f t)$$

$$+ w_I^2\sin^2(2\pi\Delta f t) + w_Q^2\cos^2(2\pi\Delta f t)$$

$$+ 2 w_I w_Q \sin(2\pi\Delta f t)\cos(2\pi\Delta f t)$$

$$= w_I^2(t) + w_Q^2(t)$$

$\Longrightarrow$ E.D. output does not depend on how we expand $w(t)$.

<u>Way 2</u> Via complex envelope.

Suppose $w_L(t) = w_I(t) + j w_Q(t)$. Then the E.D. output is

$$e(t) = \sqrt{2}\,|w_L(t)|.$$

where here w_L is complex env. wrt. f_c. Let w_L' denote the complex env. wrt f_c'.

$$w(t) = \sqrt{2}\,\mathrm{Re}\left\{w_L(t)\, e^{j2\pi f_c t}\right\}$$

$$= \sqrt{2}\,\mathrm{Re}\left\{\left(w_L(t)\, e^{j2\pi\Delta f t}\right) e^{j2\pi f_c' t}\right\}$$

$\Longrightarrow$ provided Δf is small and $w(t)$ is narrow band

$$w_L'(t) = w_L(t)\, e^{j2\pi\Delta f t}$$

and then

$$|w_L(t)| = |w_L'(t)|$$

$\Longrightarrow$ E. D. output is same for either representation.

7.17 Define $s(t)$ by

$$s(t) = s_1(t, \varphi_1) + s_2(t, \varphi_2),$$

where

$$s_i(t, \theta) = \cos(2\pi f_i t + \theta), \quad 0 \le \theta < 2\pi,$$

for $i = 1$ and $i = 2$. Suppose $s(t)$ is transmitted over a multipath channel that has two paths. The differential propagation delay for these two paths is τ_0, so the received signal is

$$\begin{aligned} r(t) &= \beta_1\{\cos(2\pi f_1 t + \varphi_1) + \cos(2\pi f_2 t + \varphi_2)\} \\ &\quad + \beta_2\{\cos[2\pi f_1(t - \tau_0) + \varphi_1] + \cos[2\pi f_2(t - \tau_0) + \varphi_2]\}. \end{aligned}$$

The parameters β_1 and β_2 account for the propagation losses for the two paths.

(a) Show that this signal can be written as

$$\begin{aligned} r(t) &= I(f_1)\cos(2\pi f_1 t + \varphi_1) + Q(f_1)\sin(2\pi f_1 t + \varphi_1) \\ &\quad + I(f_2)\cos(2\pi f_2 t + \varphi_2) + Q(f_2)\sin(2\pi f_2 t + \varphi_2), \end{aligned}$$

where $I(f) = \beta_1 + \beta_2\cos(2\pi f \tau_0)$ and $Q(f) = \beta_2 \sin(2\pi f \tau_0)$ for $-\infty < f < \infty$.

(b) Suppose that $\beta_1 = \beta_2 = 1/\sqrt{2}$. Find values for τ_0, f_1, and f_2 for which $I(f_1) = \sqrt{2}$, $I(f_2) = 1/\sqrt{2}$, $Q(f_1) = 0$, and $Q(f_2) = 1/\sqrt{2}$.

(c) For the values of β_1, β_2, τ_0, f_1, and f_2 from part **(b)**, show that the multipath channel increases the amplitude of $s_1(t, \varphi_1)$ by a factor of $\sqrt{2}$ (a factor of 2 increase in power). Show that it does not change the amplitude of $s_2(t, \varphi_2)$, but it shifts its phase by $\pi/4$ radians. Thus, the effects of the channel are frequency dependent for the parameter values in part **(b)**.

(d) Suppose that $\beta_1 = \beta_2$, $f_2 = 15$ Mhz, and $\tau_0 = 100$ ns. What is the output of the channel due to the transmitted signal $s_2(t, \varphi_2)$?

(e) Suppose $0 < \beta_2 \le \beta_1$ and $\tau_0 \ll |f_2 - f_1|^{-1}$. Show that the effects of this multipath channel are approximately independent of frequency by proving that $I(f_2) \approx I(f_1)$ and $Q(f_2) \approx Q(f_1)$ in the sense that $|I(f_2) - I(f_1)|$ and $|Q(f_2) - Q(f_1)|$ are each much smaller than β_1 and β_2.
Hint: First show that

$$|I(f_2) - I(f_1)| \le 2\left|\beta_2 \sin[\pi(f_2 - f_1)\tau_0]\right|$$

and

$$|Q(f_2) - Q(f_1)| \le 2\left|\beta_2 \sin[\pi(f_2 - f_1)\tau_0]\right|.$$

(f) Suppose again that $\beta_1 = \beta_2 = 1/\sqrt{2}$. As an example for which $\tau_0 \ll |f_2 - f_1|^{-1}$, suppose $\tau_0 = 1\ \mu$s and $f_2 - f_1 = 10$ kHz. Evaluate the bound on $|I(f_2) - I(f_1)|$ given in part **(e)**.

7.17 (a) Let $r_i(t) = \beta_1 \cos(2\pi f_i t + \varphi_i) + \beta_2 \cos[2\pi f_i(t-\tau_0) + \varphi_i]$ for $i = 1, 2$ and notice that $r(t) = r_1(t) + r_2(t)$. From the identity $\cos[2\pi f_i(t-\tau_0) + \varphi_i] = \cos(2\pi f_i t + \varphi_i)\cos(2\pi f_i \tau_0) + \sin(2\pi f_i t + \varphi_i)\sin(2\pi f_i \tau_0)$, we obtain

$$r_i(t) = [\beta_1 + \beta_2 \cos(2\pi f_i \tau_0)]\cos(2\pi f_i t + \varphi_i) + \beta_2 \sin(2\pi f_i \tau_0)\sin(2\pi f_i t + \varphi_i).$$

Define the functions I and Q by $I(f) = \beta_1 + \beta_2 \cos(2\pi f \tau_0)$ and $Q(f) = \beta_2 \sin(2\pi f \tau_0)$ for $-\infty < f < \infty$. The two components of the received signal can be written as

$$r_1(t) = I(f_1)\cos(2\pi f_1 t + \varphi_1) + Q(f_1)\sin(2\pi f_1 t + \varphi_1)$$

and

$$r_2(t) = I(f_2)\cos(2\pi f_2 t + \varphi_2) + Q(f_2)\sin(2\pi f_2 t + \varphi_2)$$

(b) $f_1 = 10$ Hz, $f_2 = 12.5$ Hz, and $\tau_0 = 0.1$ s or $f_1 = 10$ kHz, $f_2 = 12.5$ kHz, and $\tau_0 = 0.1$ ms, etc. Several sets of values are possible. For either of the two given sets of values, $f_1\tau_0 = 1$, so

$$I(f_1) = \beta_1 + \beta_2 \cos(2\pi) = \beta_1 + \beta_2 = \sqrt{2} \text{ and } Q(f_1) = \beta_2 \sin(2\pi) = 0,$$

and $f_2\tau_0 = 5/4$, so

$$I(f_2) = \beta_1 + \beta_2 \cos(5\pi/2) = \beta_1 = 1/\sqrt{2} \text{ and } Q(f_2) = \beta_2 \sin(5\pi/2) = \beta_2 = 1/\sqrt{2}.$$

(c) $r_1(t) = \sqrt{2}\cos(2\pi f_1 t + \varphi_1)$ and $r_2(t) = (\sqrt{2}/2)\cos(2\pi f_2 t + \varphi_2) + (\sqrt{2}/2)\sin(2\pi f_2 t + \varphi_2) = \cos[2\pi f_2 t + \varphi_2 - (\pi/4)]$. From the definitions of s_1 and s_2, it follows that $r_1(t) = \sqrt{2}\, s_1(t, \varphi_1)$ and $r_2(t) = s_2[t, \varphi_2 - (\pi/4)]$.

(d) $f_2\tau_0 = 3/2$, so $2\pi f_2 \tau_0 = \pi \pmod{2\pi}$, $I(f_2) = \beta_1 + \beta_2 \cos(\pi) = \beta_1 - \beta_2 = 0$, and $Q(f_2) = \beta_2 \sin(\pi) = 0$. Thus, $r_2(t) = 0$ for all t.

(e) $|I(f_2) - I(f_1)| = |\beta_2 [\cos(2\pi f_2 \tau_0) - \cos(2\pi f_1 \tau_0)]| = 2|\beta_2 \sin[\pi(f_2 - f_1)\tau_0] \sin[\pi(f_2 + f_1)\tau_0]| \leq 2|\beta_2 \sin[\pi(f_2 - f_1)\tau_0]|$. Simiarly, $|Q(f_2) - Q(f_1)| = 2|\beta_2 \sin[\pi(f_2 - f_1)\tau_0] \cos[\pi(f_2 + f_1)\tau_0]| \leq 2|\beta_2 \sin[\pi(f_2 - f_1)\tau_0]|$. Because $|f_2 - f_2|\tau_0 \ll 1$ and $|\sin x| \leq |x|$ for $|x| \leq \pi/2$, then $|I(f_2) - I(f_1)| \leq 2|\beta_2 \pi(f_2 - f_1)\tau_0| \ll \beta_2 \leq \beta_1$. Similarly, $|Q(f_2) - Q(f_1)| \leq 2|\beta_2 \pi(f_2 - f_1)\tau_0| \ll \beta_2 \leq \beta_1$. (Notice that as $\tau_0 \to 0$, $I(f_2) \to I(f_1)$ and $Q(f_2) \to Q(f_1)$).

(f) Observe that $2|\beta_2 \sin[\pi(f_2 - f_1)\tau_0] = \sqrt{2}\sin(\pi/100) \approx 0.044$, so $|I(f_2) - I(f_1)| \leq 0.044$ and $|Q(f_2) - Q(f_1)| \leq 0.044$. For example, if $f_1 = 1$ MHz and $f_1 = 1.01$ MHz, then $I(f_1) = \sqrt{2} \approx 1.41421$ and $I(f_2) = [1 + \cos(0.02\pi)]/\sqrt{2} \approx 1.41282$, so $I(f_2) - I(f_1) \approx 0.0014 = 1.4 \times 10^{-3}$. Note that for this example, $|I(f_2) - I(f_1)| < 10^{-3} I(f_2) < 10^{-3} I(f_1)$, so $|I(f_2) - I(f_1)|$ is very small in comparison with either $I(f_1)$ or $I(f_2)$.

7.20 Consider the DBPSK signal given by

$$\sqrt{2}\,A\cos[(\omega_c+\omega_0)\,t+\psi_n+\varphi]$$

for $nT \le t < (n+1)T$, which we refer to as pulse n. For DBPSK, the phase angles ψ_n and ψ_{n-1} for pulse n and pulse $n-1$ satisfy $\psi_n = \psi_{n-1}+\pi\beta_n$. The radian frequency ω_c is the nominal carrier frequency, and the radian frequency ω_0 is an unknown frequency offset. If pulse $n-1$ is delayed by T units of time, it is given by

$$\sqrt{2}\,A\cos[(\omega_c+\omega_0)(t-T)+\psi_{n-1}+\varphi].$$

The instantaneous phase difference (modulo 2π) for pulse n and the delayed version of pulse $n-1$ is

$$\begin{aligned}\theta_n &= [(\omega_c+\omega_0)\,t+\psi_n+\varphi]-[(\omega_c+\omega_0)(t-T)+\psi_{n-1}+\varphi]\\ &= \omega_c T+\omega_0 T+\psi_n-\psi_{n-1}=\omega_0 T+\psi_n-\psi_{n-1}.\end{aligned}$$

The last step follows from $\omega_c T = 0$ (modulo 2π). Now use $\Delta_n = \psi_n - \psi_{n-1} = \pi\beta_n$ to conclude the instantaneous phase difference is $\theta_n = \omega_0 T + \Delta_n = \omega_0 T + \pi\beta_n$, from which we cannot recover the data β_n, because ω_0 is unknown. Without knowing ω_0, we cannot determine whether $\beta_n = 1$ or $\beta_n = 0$. For example, if $\theta_n = \pi$, the data symbol could be $\beta_n = 1$ (if $\omega_0 = 0$) or $\beta_n = 0$ (if $\omega_0 = \pi/T$). Since β_n represents the information that the transmitter is attempting to convey to the receiver, the conclusion is that this information is not conveyed by DBPSK if there is an unknown frequency offset.

Now consider DDBPSK. The signal format is the same as for DBPSK, but the phase modulation is given by $\psi_n = 2\,\psi_{n-1} - \psi_{n-2} + \Gamma_n$, where $\Gamma_n = \Delta_n - \Delta_{n-1} = \pi(\beta_n - \beta_{n-1})$. Assume that an initial data variable is known to both the transmitter and receiver (i.e., always set $\beta_{-1} = 1$ at the beginning of the message that is used to convey $\beta_0, \beta_1, \beta_2, \ldots$). Examine the signal over three consecutive intervals, and show that the difference of two consecutive values of the instantaneous phase difference (i.e., $\theta_n - \theta_{n-1}$) does convey the desired information, even if there is a unknown frequency offset. Explain how this information is conveyed.

7.20 The phase difference for pulses n and $n-1$ is

$$\begin{aligned}\theta_n &= [(\omega_c+\omega_0)t+\psi_n+\varphi]-[(\omega_c+\omega_0)(t-T)+\psi_{n-1}+\varphi] \\ &= \omega_0 T+\psi_n-\psi_{n-1}=\omega_0 T+\Delta_n.\end{aligned}$$

Similarly, the phase difference for pulses $n-1$ and $n-2$ is

$$\theta_{n-1}=\omega_0 T+\psi_{n-1}-\psi_{n-2}=\omega_0 T+\Delta_{n-1}.$$

The difference of two consecutive phase differences (the double difference) is

$$\theta_n-\theta_{n-1}=\Delta_n-\Delta_{n-1}=\pi(\beta_n-\beta_{n-1}),$$

which is independent of the frequency offset. We begin with the known value of β_{-1}, which is known to both the transmitter and receiver, and the double difference $\theta_0-\theta_{-1}$ conveys the value of β_0. Then, the double difference $\theta_1-\theta_0$ conveys the value of β_1, since β_0 is known from the previous step. In the general step, the double difference $\theta_n-\theta_{n-1}$ conveys the information in β_n, because β_{n-1} is known from the previous step.

7.23 A standard binary, equal-energy, orthogonal FSK signal set $\{s_0, s_1\}$ is employed with the receiver shown in Figure 7-4. In the absence of fading, the received signal is given by $s_i(t) = \sqrt{2}\beta\cos(\omega_i t + \varphi_i)$, $0 \le t < T$, for $i = 0$ if s_0 is sent or $i = 1$ if s_1 is sent. Assume that $\omega_0 \neq \omega_1$ and that ω_0 and ω_1 are multiples of $2\pi/T$. The channel is an AWGN channel with spectral density $N_0/2$.

(a) If the channel exhibits no fading, what is the probability of bit error? Answer in terms of the appropriate function and the parameters β, N_0, and T.

For parts **(b)–(f)**, the channel is a nonselective fading channel for which the received signal is modeled as $Vs_i(t)$. The random variable V is Gaussian with mean 0 and variance λ^2, it is independent of $X(t)$, and it is independent of which signal is transmitted.

(b) Give an expression for $\bar{\mathcal{E}}_b$, the *average* energy per bit in the received signal. Your answer must be in terms of the parameters β, λ, and T.

(c) Derive an expression for $\overline{P}_{e,0}$, the average probability of error when s_0 is sent. Express your answer in terms of the appropriate function and the parameters β, λ, N_0, and T.

(d) Define the parameter ζ by $\zeta = \bar{\mathcal{E}}_b/N_0$, and give an expression for $\overline{P}_{e,0}$ in terms of the parameter ζ only.

For parts **(e)** and **(f)**, suppose that β and N_0 are unknown. However, it is determined that if s_0 is sent, then $E\{R_0^2\} = \rho_0$ and $E\{R_1^2\} = \rho_1$. For parts **(e)** and **(f)**, you must express your answer in terms of the appropriate function and the parameters ρ_0, ρ_1, and λ only. You may not use the parameters β, N_0, or T in your answer.

(e) Give an expression for $\overline{P}_{e,0}$, the average probability of error when s_0 is sent.

(f) Give an expression for $\overline{P}_{e,1}$, the average probability of error when s_1 is sent.

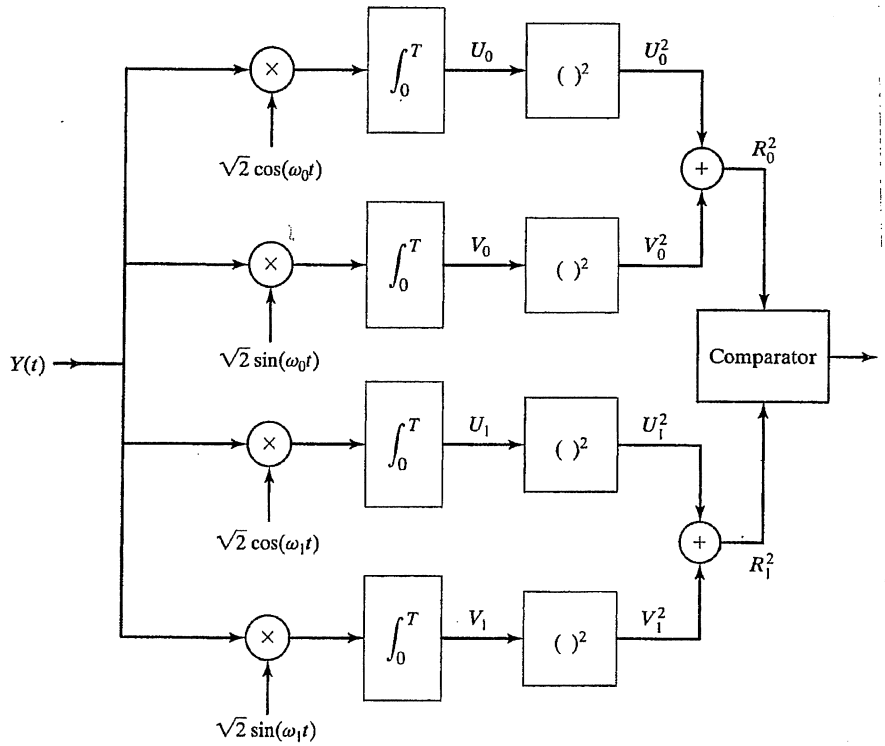

Figure 7-4: Optimum receiver for noncoherent BFSK communications.

$$S_0(t) = \sqrt{2}\beta \cos(\omega_0 t + \phi_0) \quad 0 \le t \le T$$
$$S_1(t) = \sqrt{2}\beta \cos(\omega_1 t + \phi_1) \quad 0 \le t \le T$$

} received signals under the two hypotheses

$\omega_0 \neq \omega_1$; $\omega_0 = n_0 \frac{2\pi}{T}$, $\omega_1 = n_1 \frac{2\pi}{T}$

AWGN $N_0/2$

(a) For the non-fading case find the prob. of a bit error.

This case has been covered in class notes and in the text though must change notation a bit. Doing so find the prob. of errors:

$$P_{e,0} = \frac{1}{2} e^{-\alpha_0^2/4\sigma^2} \qquad P_{e,1} = \frac{1}{2} e^{-\alpha_1^2/4\sigma^2}$$

$\boxed{\text{MBP 7.23}}$

where $\alpha_0 = \beta T$, $\alpha_1 = \beta T$, $\sigma^2 = N_0 T/2$

$$\Rightarrow P_{e,0} = P_{e,1} = P_e = \frac{1}{2} e^{-\beta^2 T^2 / 4 \cdot N_0 T/2}$$

$$= \frac{1}{2} e^{-\beta^2 T / 2N_0}$$

Now change gears and consider case of a nonselective fading channel. Thus, the received signal now modeled as

$$V s_i(t) \qquad V \sim N(0, \lambda^2)$$

$V \perp\!\!\!\perp$ thermal AWGN noise

$\perp\!\!\!\perp$ which signal was transmitted.

(b) Find an expression for $\overline{E_b}$ the average energy per bit in received signal.

Received signals are

$$V s_i(t) = \sqrt{2}\beta V \cos(\omega_i t + \phi_i) \qquad 0 \le t \le T$$

Conditioned of $V = v$ the average energy is

$$\int_0^T [v s_i(t)]^2 \, dt = \beta^2 v^2 T \longrightarrow$$ does not dep. on signal transmitted in this case.

$$\overline{E}_b = E\{\beta^2 V^2 T\} = \beta^2 \lambda^2 T$$

(c) Derive $\overline{P}_{e,0}$ (average prob. of error give S_0)

By first conditioning on $V = v$ we can apply the result from (a) to conclude

$$P_{e,0}(v) = \frac{1}{2} e^{-v^2\beta^2 T/2N_0}$$

Then averaging over the distribution of V:

$$\overline{P}_{e,0} = E\{P_{e,0}(V)\} = E\left\{\frac{1}{2} e^{-V^2\beta^2 T/2N_0}\right\}$$

$$= \int_{-\infty}^{\infty} \frac{1}{2} e^{-v^2\beta^2 T/2N_0} \frac{1}{\sqrt{2\pi}\lambda} e^{-v^2/2\lambda^2} \, dv$$

$$= \frac{1}{2\lambda} \frac{1}{\sqrt{2\pi}} \int_{-\infty}^{\infty} \exp\left\{-\frac{v^2}{2}\left[\frac{\beta^2 T}{N_0} + \frac{1}{\lambda^2}\right]\right\} dv$$

If we define $\tilde{\sigma}^2 = \left[\frac{\beta^2 T}{N_0} + \frac{1}{\lambda^2}\right]^{-1}$ then can write integral above as:

$$\frac{\tilde{\sigma}}{2\lambda} \int_{-\infty}^{\infty} \frac{1}{\sqrt{2\pi}\tilde{\sigma}} e^{-v^2/2\tilde{\sigma}^2} \, dv \qquad \tilde{\sigma} = \frac{1}{\sqrt{\frac{\beta^2 T}{N_0} + \frac{1}{\lambda^2}}}$$

But the integrand is a pdf and we are integrating over the range of the rv. Therefore, integral equals 1

$$\Longrightarrow \quad \overline{P}_{e,o} = \frac{\tilde{\sigma}}{2\lambda} = \frac{1}{2\lambda} \frac{1}{\sqrt{\frac{\beta^2 T}{N_o} + \frac{1}{\lambda^2}}}$$

$$= \frac{1}{2\sqrt{1 + \lambda^2 \beta^2 T / N_o}}$$

(d) Define $\xi = \overline{E}_b / N_o$ and re-write the $\overline{P}_{e,o}$ expression.

$$\xi = \overline{E}_b / N_o = \beta^2 \lambda^2 T / N_o$$

$$\Longrightarrow \quad \overline{P}_{e,o} = \frac{1}{2\sqrt{1 + \overline{E}_b / N_o}} = \frac{1}{2\sqrt{1+\xi}}$$

Suppose β and N_0 are unknown. But it is known that

$$\text{If } s_0 \text{ is sent} \Rightarrow E\{R_0^2\} = \rho_0$$
$$\Rightarrow E\{R_1^2\} = \rho_1$$

(e) In terms of the new parameters write express. for $\overline{P}_{e,0}$

Need to back up and review steps leading to the model for R_0, given the new definition for the received signals.

<u>Under hypothesis "S_0 is sent"</u>

$$Y(t) = \sqrt{2}\beta V \cos(\omega_0 t + \phi_0) + N(t) \qquad 0 \le t \le T$$

Running through the usual steps

$$U_0 = \beta V T \cos\phi_0 + X_0$$

$$V_0 = -\beta V T \sin\phi_0 + Y_0$$

$$U_1 = X_1$$

$$V_1 = Y_1$$

where X_0, Y_0, X_1, Y_1 iid zero mean Gaussian rvs of variance

$$N_0 T/2$$

$V \sim N(0, \lambda^2)$ and what needs to be indep is indep.

<u>Compute</u> $E_0\{U_0^2\}$ and $E_0\{V_0^2\}$ using

$$U_0^2 = \beta^2 V^2 T^2 \cos^2\phi_0 + 2\beta T \cos\phi_0 V X_0 + X_0^2$$

$$\Longrightarrow E_0\{U_0^2\} = \beta^2\lambda^2 T^2 \cos^2\phi_0 + N_0 T/2$$

since $E_0\{V X_0\} = 0$

Similarly

$$E_0\{V_0^2\} = \beta^2\lambda^2 T^2 \sin^2\phi_0 + N_0 T/2$$

$$\Longrightarrow E_0\{R_0^2\} \triangleq \rho_0 = E_0\{U_0^2\} + E_0\{V_0^2\}$$

$$= \beta^2\lambda^2 T^2 + N_0 T$$

In same fashion

$$E_0\{R_1^2\} \triangleq \rho_1 = N_0 T$$

Recall $\overline{P_{e,0}} = \dfrac{1}{2\sqrt{1 + \lambda^2\beta^2 T/N_0}}$

Notice that

$$\frac{\rho_0}{\rho_1} = \frac{\beta^2\lambda^2 T^2 + N_0 T}{N_0 T}$$

$$= 1 + \frac{\lambda^2\beta^2 T}{N_0}$$

$$\Longrightarrow \overline{P_{e,0}} = \frac{1}{2\sqrt{\rho_0/\rho_1}} = \frac{1}{2}\sqrt{\frac{\rho_1}{\rho_0}}$$

(f) Easy to see that $\overline{P_{e,1}} = \overline{P_{e,0}}$

Description and Block Diagram for Problems 5 and 6

The block diagram shown is a possible implementation of a differentially encoded communication system.

The encoder accepts a binary (i.e., 0 or 1) string B_k at the input and produces a binary string D_k at the output. The output string contains an extra digit D_{-1}, which is set as an initial condition of the encoder. The symbol "$\oplus$" in the encoder denotes modulo 2 binary addition (i.e., exclusive or).

The decoder takes a binary string input $\hat{D}_k$ and produces a binary string output $\hat{B}_k$ containing one fewer digit than the input. The digits are lined up so that ideally $\hat{B}_k = B_k$ for $k = 0, 1, 2, \ldots$.

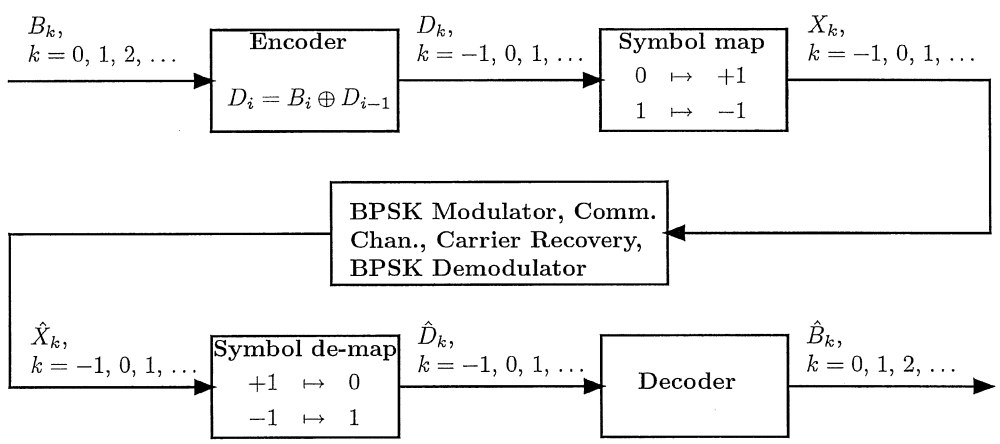

Problem 5 [redacted] Consider the differentially encoded BPSK system described on the previous page focussing on the Encoder and Decoder blocks.

(a) [redacted] The table below gives an example input string B_k. Assuming that the encoder initial condition is $D_{-1} = 0$ as shown, fill in the values for the encoded bits D_k in the indicated row of the table.

$D_k = B_k \oplus D_{k-1}$

	Time index k										
	-1	0	1	2	3	4	5	6	7	8	9
B_k	–	0	1	1	0	1	0	1	0	0	1
D_k	0	0	1	0	0	1	1	0	0	0	1
$\hat{D}_k$	0	0	1	0	0	1	1	0	0	0	1
$\hat{B}_k$	–	0	1	1	0	1	0	1	0	0	1

(b) [redacted] The bits D_k starting from $k = -1$ are mapped to symbols, sent through the channel, and then de-mapped to produce the estimated bit sequence $\hat{D}_k$. Assuming that no bit errors occur in transmission, fill in the row in the above table corresponding to $\hat{D}_k$.

Then give a mathmatical formula for the decoder and write down the estimated bit sequence $\hat{B}_k$ in the above table.

$$\boxed{\hat{B}_k = \hat{D}_k \oplus \hat{D}_{k-1}} = D_k \oplus D_{k-1} \quad \text{if no channel errors}$$

$$= (B_k \oplus D_{k-1}) \oplus D_{k-1} \quad \text{substituting encoder formula.}$$

$$= B_k \oplus (D_{k-1} \oplus D_{k-1})$$

$$= B_k \oplus 0$$

$$= B_k \longrightarrow \text{In absense of channel errors the bit stream is reproduced.}$$

Problem 5 (cont'd.)

(c) [redacted] Repeat part (b) for the table shown below but now assume that the channel is such that the bits $\hat{D}_k$ are the complements of the corresponding bits D_k. Use exactly the same decoder as you found in part (b). The table is repeated below. You will need to fill the D_k row in with the same values as found in part (a).

Explain why the result you find is important in BPSK systems, which use either the squaring loop or the Costas loop for carrier phase recovery.

	Time index k										
	-1	0	1	2	3	4	5	6	7	8	9
B_k	–	0	1	1	0	1	0	1	0	0	1
D_k	0	0	1	0	0	1	1	0	0	0	1
$\hat{D}_k$	1	1	0	1	1	0	0	1	1	1	0
$\hat{B}_k$	–	0	1	1	0	1	0	1	0	0	1

Channel complementing all bits in D_k is what happens when carrier recovery loop locks on with a phase offset of π.

Since $\hat{B}_k = B_k$ in this case we see that differential encoding is insensitive to phase offset

Problem 5 (cont'd.)

(d) [redacted] Repeat part (b) only now assuming that a single bit error is made in the channel at time index $k = 3$, i.e., $\hat{D}_k = D_k$ for $k \neq 3$ and $\hat{D}_3 \neq D_3$. The position of the bit error is indicated in the table below with a small box.

Comment on the result in light of what was found in the homework problem about the probability of error performance of differentially encoded BPSK in comparison to regular BPSK.

	Time index k										
	-1	0	1	2	3	4	5	6	7	8	9
B_k	–	0	1	1	0	1	0	1	0	0	1
D_k	0	0	1	0	0	1	1	0	0	0	1
$\hat{D}_k$	0	0	1	0	$\boxed{1}$	1	1	0	0	0	1
$\hat{B}_k$	–	0	1	1	1	0	0	1	0	0	1

A single channel error produces two errors in the decoded bit stream.

In HW saw that the bit error prob. of DBPSK was approx twice that of BPSK at high SNR. Above is an illustration of why this happens.

Problem 6 [redacted] This problem concerns just the encoder of the DBPSK system given before. Suppose that the input bit string B_k is independent and identically distributed (i.i.d.) with

$$P(B_k = 1) = p \quad \text{and} \quad P(B_k = 0) = 1 - p.$$

(a) [redacted] Assuming that the encoder initial state is $D_{-1} = 0$ find the marginal probability distribution of the encoder output for all time k, i.e., find

$$q_k \stackrel{\text{def}}{=} P(D_k = 1)$$

for $k \geq 0$. *Hint:* Find a first order difference equation for q_k and solve it.

(b) [redacted] For general p, are the random variables $\{D_k : k \geq 0\}$ identically distributed? Are they statistically independent? You must prove or give a counter example.

(c) [redacted] For the special case of $p = 1/2$, are the random variables $\{D_k : k \geq 0\}$ identically distributed? Are they statistically independent? You must prove or give a counter example.

(a) $D_k = B_k \oplus D_{k-1}$. Because of the dependence on past history it makes sense to condition on the value of D_{k-1} in determining $P(D_k = 1)$

$$P(D_k = 1) = P(D_k = 1 \mid D_{k-1} = 0)\, P(D_{k-1} = 0) + P(D_k = 1 \mid D_{k-1} = 1)\, P(D_{k-1} = 1)$$
$$= P(B_k = 1)(1 - q_{k-1}) + P(B_k = 0)\, q_{k-1}$$

$$\Longrightarrow \quad q_k = p\,(1 - q_{k-1}) + (1-p)\, q_{k-1} = p - p\,q_{k-1} + q_{k-1} - p\,q_{k-1}$$
$$= (1 - 2p)\, q_{k-1} + p$$

The initial condition for this difference equation is $q_{-1} = P(D_{-1} = 1) = 0$ since start with prob. one in state where $D_{-1} = 0$. Then also have $q_0 = p$.

To solve the diff. equation we need only carry it out for a few steps until a pattern emerges.

Let $a = 1 - 2p$ for short.

Problem 6 (cont'd.)

$$q_{-1} = 0$$
$$q_0 = p$$
$$q_1 = ap + p$$
$$q_2 = a(ap+p) + p = a^2p + ap + p$$
$$q_3 = a(a^2p + ap + p) + p = a^3p + a^2p + ap + p$$

Pattern is clear:

$$q_k = p\sum_{i=0}^{k} a^i$$

To get a nice closed form we should simplify the sum.

Note:

$$\sum_{i=0}^{\infty} a^i = \frac{1}{1-a}\ ; \quad \sum_{i=k+1}^{\infty} a^i = a^{k+1}\sum_{i=0}^{\infty} a^i = \frac{a^{k+1}}{1-a}$$

$$\Longrightarrow \frac{1}{1-a} - \frac{a^{k+1}}{1-a} = \frac{1-a^{k+1}}{1-a} = \sum_{i=0}^{k} a^i$$

$$\therefore \quad q_k = p\,\frac{1-a^{k+1}}{1-a} = p\,\frac{1-(1-2p)^{k+1}}{1-(1-2p)}$$

$$= p\,\frac{1-(1-2p)^{k+1}}{2p} = \frac{1}{2}\left[1-(1-2p)^{k+1}\right]$$

(b) It is obvious the D_k are not identically distributed in general because the marginal probabilities $P(D_k=1)$ depend on k.

For statistical independence start by looking at

$$P(D_k=1 \mid D_{k-1}=0) \quad \text{and} \quad P(D_k=1 \mid D_{k-1}=1)$$

Problem 6 (cont'd.)

If they are statistically indep then the conditional probabilities should not depend on the conditioning variable. But here

$$P(D_k=1 \mid D_{k-1}=0) = P(B_k=1) = p \neq q_k$$

$$P(D_k= \mid D_{k-1}=1) = P(B_k=0) = 1-p \neq q_k$$

$\therefore \{D_k\}$ not an indep. seq.

(c) Special case $p = 1/2$

Then $q_k = 1/2 \ \forall k$. Now marginal distributions of the $\{D_k\}$ are identical.

To show independence of the $\{D_k\}$ it is enough to show

$$P(D_k=1 \mid D_{k-1}=0) = P(D_k=1 \mid D_{k-1}=1) = 1/2$$

since $\{D_k\}$ is a 1st order Markov process. Of course, the above holds just as it did in part (b).

3.9. Modify the simulation program given in Computer Example 3.4 to allow the sampling frequency to be entered interactively. Examine the effect of using different sampling frequencies by executing the simulation with a range of sampling frequencies. Be sure that you start with a sampling frequency that is clearly too low and gradually increase the sampling frequency until you reach a sampling frequency that is clearly higher than is required for an accurate simulation result. Comment on the results. How do you know that the sampling frequency is sufficiently high?

Solution to ECE 440 Problem 41

Modification to Z&T Computer Example 3.4 page 179 to allow experimentation with sampling frequency

File = problem41.m

Solution uses a for loop to step through a number of values of the sampling rate. For each sampling rate the PLL response to a frequency step is computed. A previous homework problem gives a rough idea of the sampling rate required to keep aliasing at bay for the natural frequency and damping factor used here.

It turns out that the lower values chosen for sampling frequency do not result in a correct simulation. This can be seen by comparing the plots. Note that above a certain sampling frequency the plots change very little indicating roughly where the minimum sampling frequency is.

```
clear all;                      %Be safe

fdel = 35;
fn = 10;
zeta = 0.707;
Kt = 4*pi*zeta*fn;              %Loop gain
a = pi*fn/zeta;                 %Loop filter parameter

tmax = 2;                       %Length of simulation in seconds
fs = [250, 500, 1000, 1500, 2000, 2500]; %Sampling rates to try (Hz)

for i = 1:length(fs)

    npts = tmax*fs(i);
    t = (0:(npts - 1))/fs(i);
    T = 1/fs(i);
    nsettle = fix(npts/10);         %Set nsettle time as 0.1*npts

    filt_in_last = 0;
    filt_out_last = 0;
    vco_in_last = 0;
    vco_out = 0;
    vco_out_last = 0;


    for ii = 1:npts

        if ii < nsettle
            fin(ii) = 0;
            phin = 0;
        else
            fin(ii) = fdel;
            phin = 2*pi*fdel*T*(ii-nsettle);
        end

        s1 = phin - vco_out;
        s2 = sin(s1);               %Sinusoidal phase detector
        s3 = Kt*s2;
```

```
        filt_in = a*s3;
        filt_out = filt_out_last + (T/2)*(filt_in + filt_in_last);
        filt_in_last = filt_in;
        filt_out_last = filt_out;
        vco_in = s3 + filt_out;
        vco_out = vco_out_last + (T/2)*(vco_in + vco_in_last);
        vco_in_last = vco_in;
        vco_out_last = vco_out;
        phierror(ii) = s1;
        fvco(ii) = vco_in/(2*pi);

    end

    figure
    plot(t,fin,t,fvco)
    grid
    xlabel('Time in seconds')
    ylabel('Frequency in Hz')
    title(['Result for sampling frequency ', num2str(fs(i)), ' Hz'])

    clear fin phierror fvco


end
```

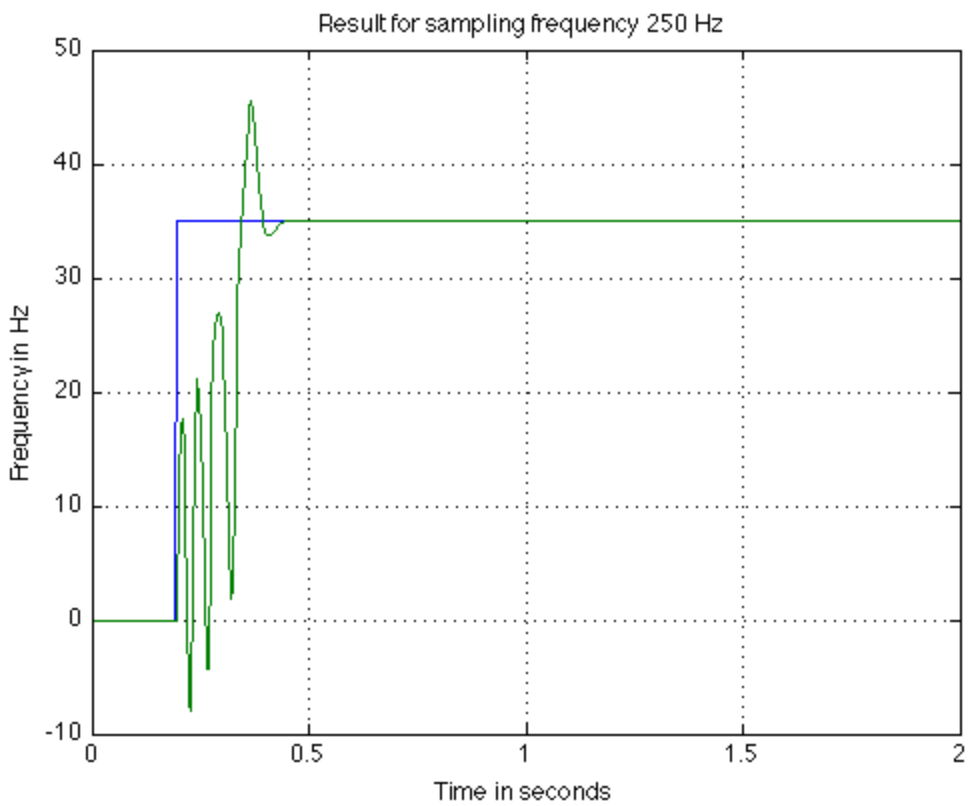

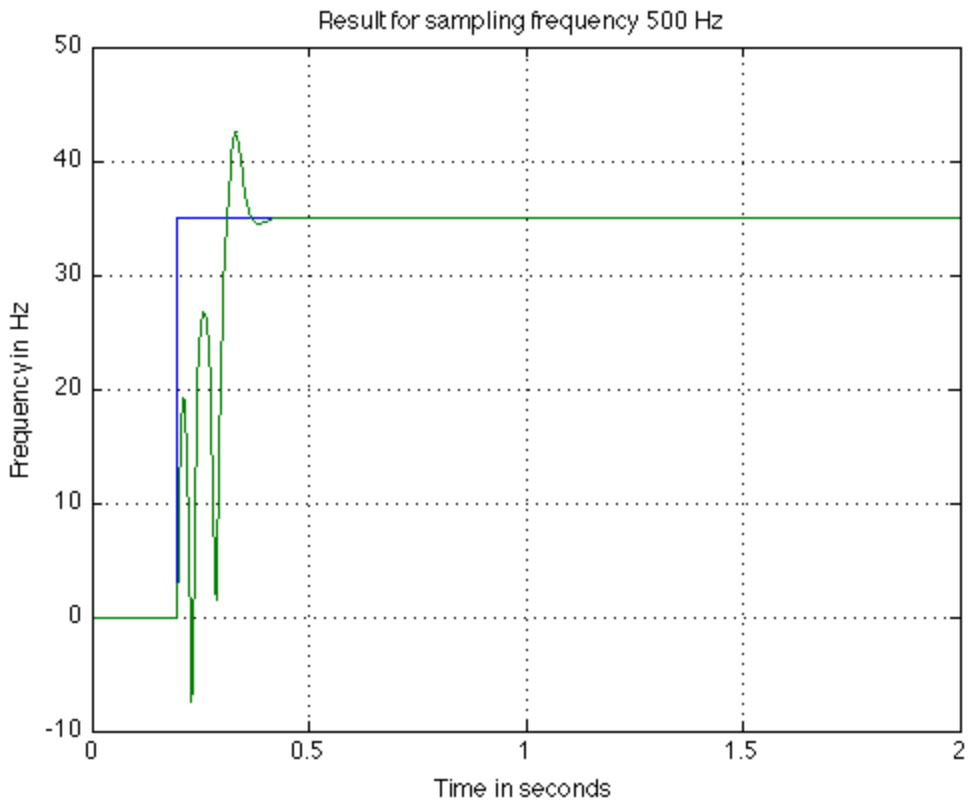
Result for sampling frequency 500 Hz
Frequency in Hz
Time in seconds
50
40
30
20
10
0
-10
0
0.5
1
1.5
2

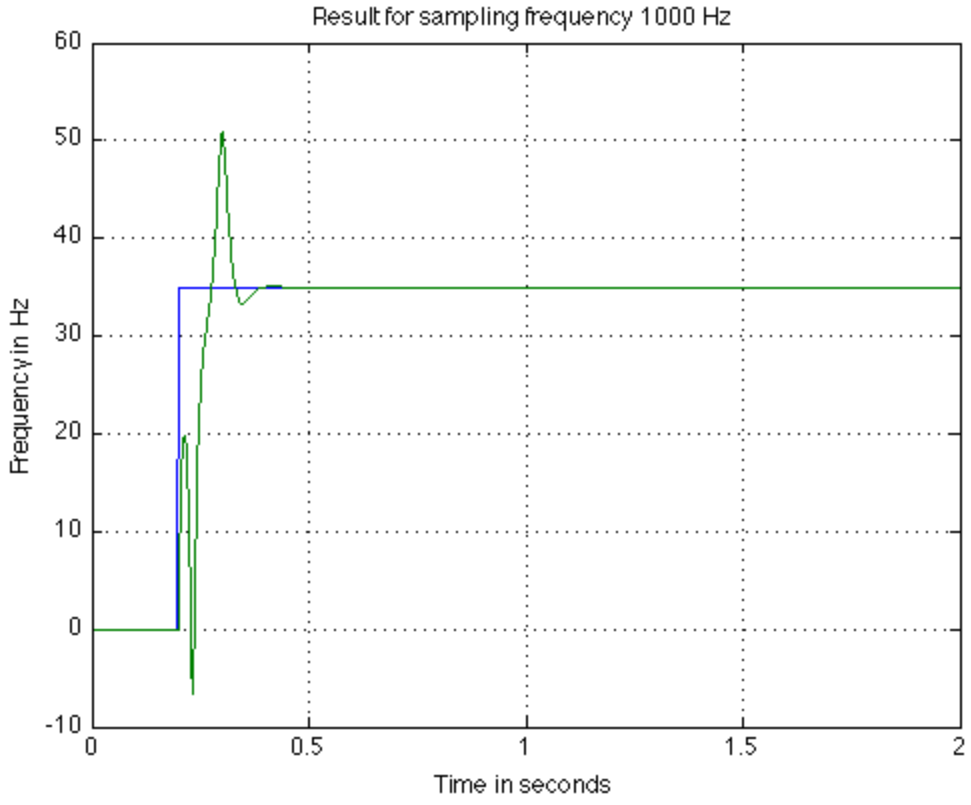
Result for sampling frequency 1000 Hz
Frequency in Hz
Time in seconds
60
50
40
30
20
10
0
-10
0
0.5
1
1.5
2

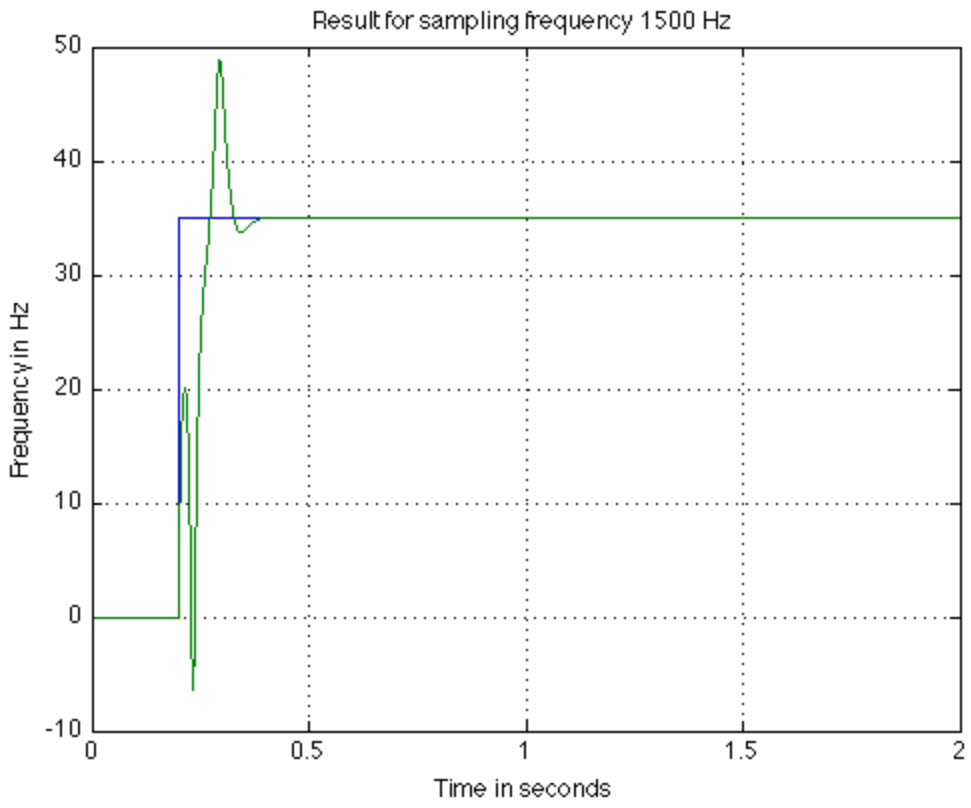
Result for sampling frequency 1500 Hz
Frequency in Hz
Time in seconds
50
40
30
20
10
0
-10
0
0.5
1
1.5
2

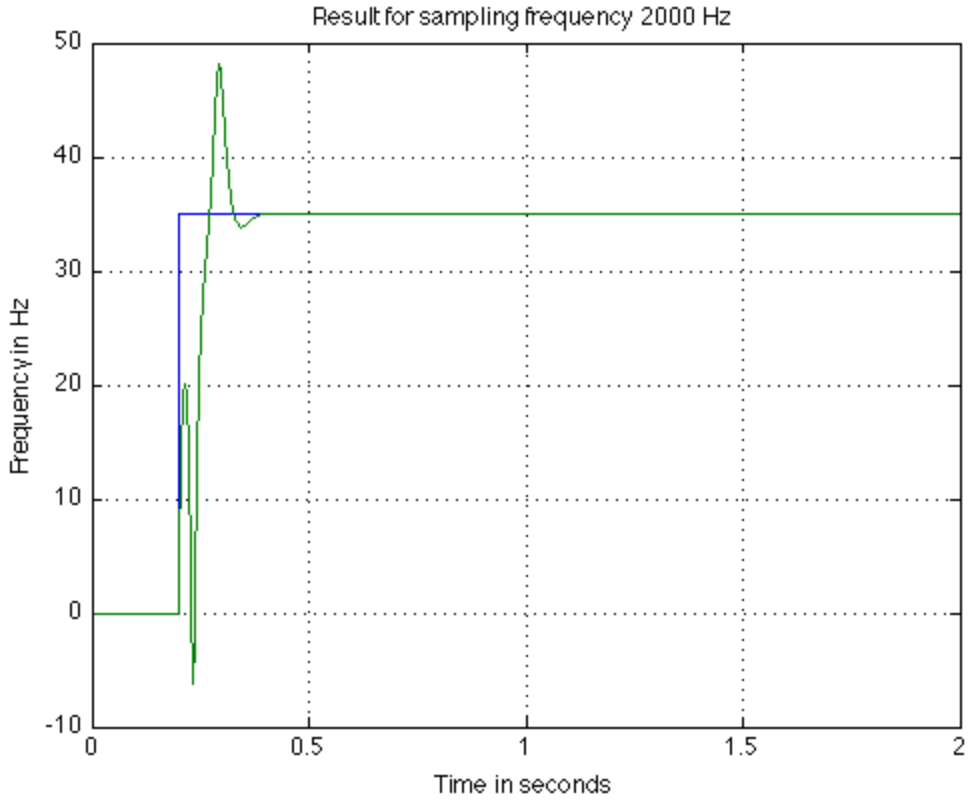
Result for sampling frequency 2000 Hz
Frequency in Hz
Time in seconds
50
40
30
20
10
0
-10
0
0.5
1
1.5
2

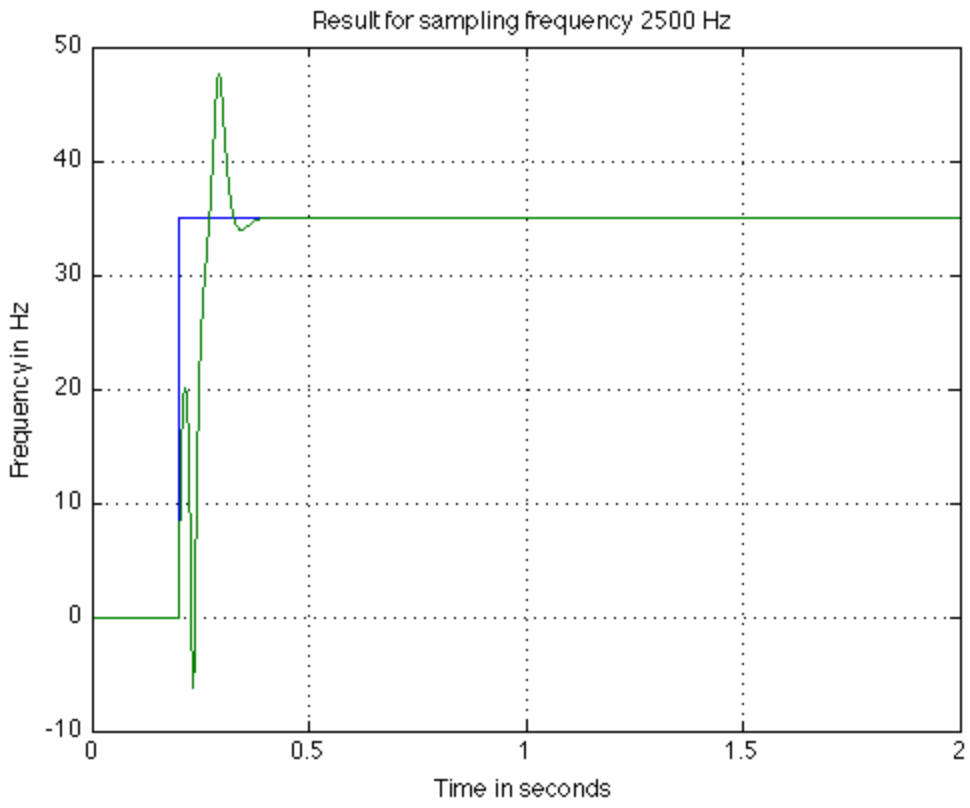

Published with MATLAB® 7.9

Problem 44: Modify the simulation program in Computer Example 3.4 to replace the perfect loop filter with the imperfect loop filter of Problem 38 where $\lambda = 0.1$.

Desire to implement imperfect filter $H_{loop}(s) = \dfrac{s+a}{s+\lambda a}$ by modifying CE 3.4.

Have a routine for integration. Thus need to show how to implement this loop filter using an integrator.

Consider the generic architecture

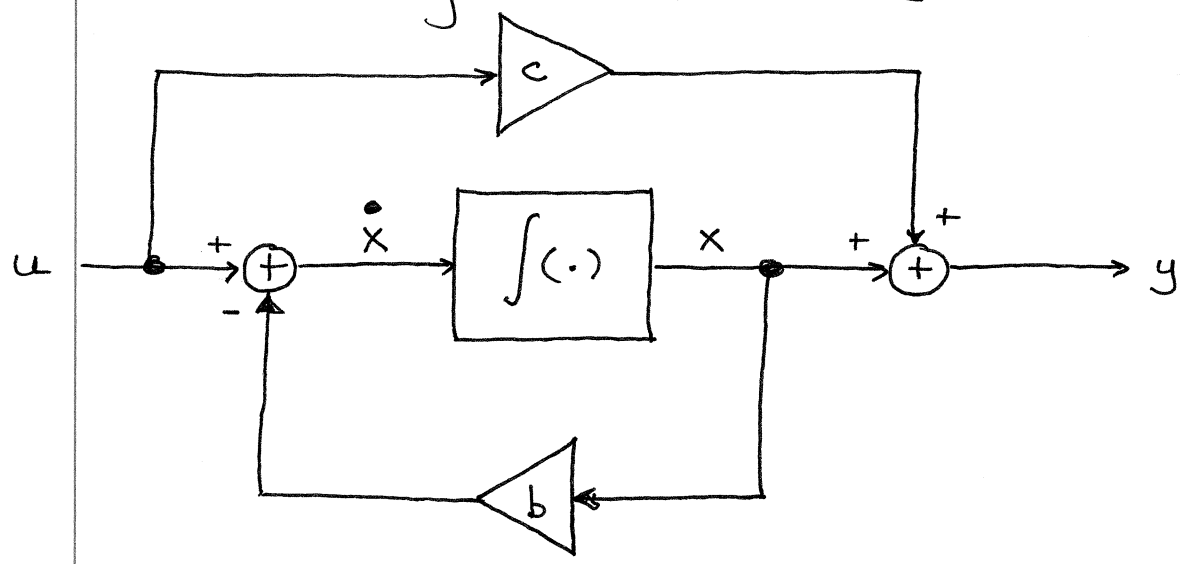

$$\dot{x} = u - bx$$
$$sX = U - bX \quad \Longrightarrow \quad \frac{X}{U} = \frac{1}{s+b}$$

$$y = x + cu$$
$$Y = X + cU = \frac{1}{s+b}U + cU$$
$$= \frac{1 + cs + bc}{s+b}U$$
$$= c\,\frac{s + \frac{bc+1}{c}}{s+b}U$$

Can we pick b, c st

$$b = \lambda a$$

$$\frac{bc+1}{c} = a$$

So set $b = \lambda a$ and try to solve for c.

$$\frac{\lambda a c + 1}{c} = a$$

$$\lambda a c + 1 = a c$$

$$1 = ac - \lambda a c = (a - \lambda a) c$$

$$\Longrightarrow \quad b = \lambda a, \quad c = \frac{1}{a - \lambda a}$$

This will work for the desired pole and zero but will leave us with a gain term we may not want.

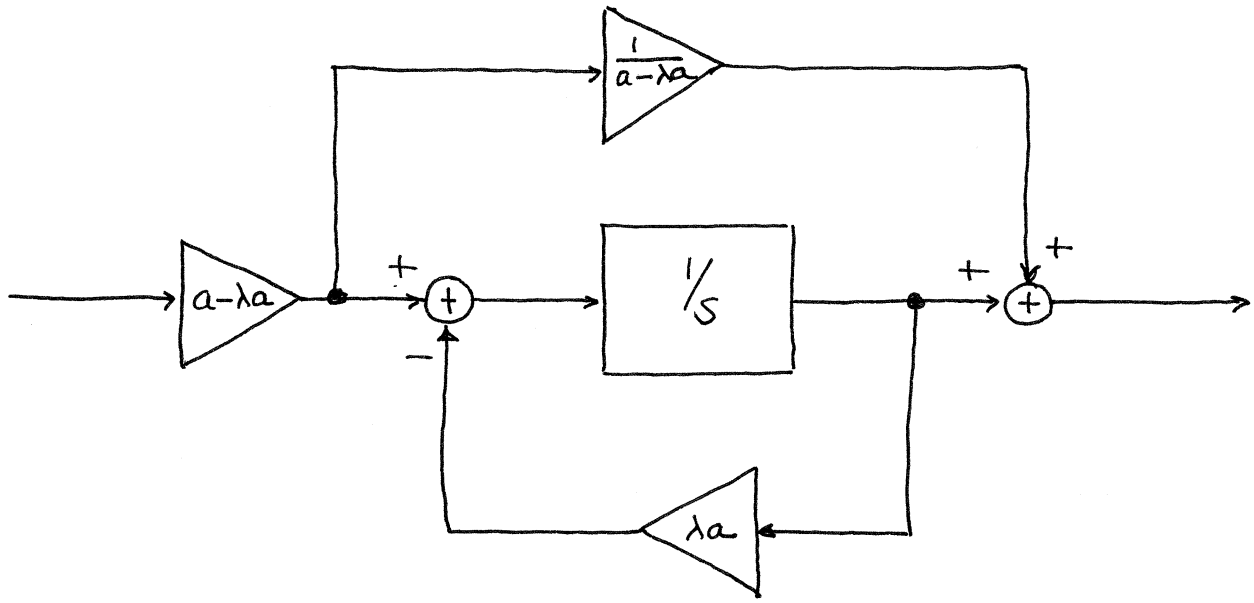

Code was modified to include the above loop filter. Then code was run with $\lambda = 0.1$ to experiment with lock range.

Found loop locks for $\Delta f = 57$ Hz in about 3.5 sec. while for $\Delta f = 58$ Hz it never locks.

Note that if make loop closer to perfect, or perf. it will again lock with $\Delta f = 58$ Hz.

Solution to ECE 440 Problem 44, Spring 2010

File = problem.m

Contents

Beginning of preprocessor

```
clear all;                      %Be safe

fdel = 57;
fn = 10;
zeta = 0.707;
Kt = 4*pi*zeta*fn;              %Loop gain
a = pi*fn/zeta;                 %Loop filter parameter

tmax = 5;                       %Length of simulation in seconds
fs = 3000;                      %Sampling rates to try (Hz)


npts = tmax*fs;
t = (0:(npts - 1))/fs;
T = 1/fs;
nsettle = fix(npts/10);         %Set nsettle time as 0.1*npts

lambda = 0.1;

temp = zeta + sqrt(zeta^2 - lambda);
Kt = 2*pi*fn*temp;
a = (2*pi*fn)/temp;
gain1 = a - lambda*a;
gain2 = 1/gain1;
gain3 = lambda*a;

filt_in_last = 0;
filt_out_last = 0;
vco_in_last = 0;
vco_out = 0;
vco_out_last = 0;

% End of preprocessor
```

Beginning of Simulation Loop

```
for i = 1:npts

    if i < nsettle
        fin(i) = 0;
        phin = 0;
    else
```

```
        fin(i) = fdel;
        phin = 2*pi*fdel*T*(i-nsettle);
    end

    s1 = phin - vco_out;
    s2 = sin(s1);                %Sinusoidal phase detector
    s3 = gain1*Kt*s2;

    filt_in = s3 - gain3*filt_out_last;
    filt_out = filt_out_last + (T/2)*(filt_in + filt_in_last);
    filt_in_last = filt_in;
    filt_out_last = filt_out;
    vco_in = gain2*s3 + filt_out;
    vco_out = vco_out_last + (T/2)*(vco_in + vco_in_last);
    vco_in_last = vco_in;
    vco_out_last = vco_out;
    phierror(i) = s1;
    fvco(i) = vco_in/(2*pi);
    freqerror(i) = fin(i) - fvco(i);

end

% End of Simulation Loop
```

Beginning of Postprocessor

```
subplot(2,1,1)
plot(t,fin,t,fvco)
title(['Input Frequency and VCO Frequency for freq. step = ', ...
    num2str(fdel), 'Hz'])
xlabel('Time - Seconds')
ylabel('Frequency - Hertz')
grid

subplot(2,1,2)
plot(phierror/2/pi,freqerror)
title('Phase Plane')
xlabel('Phase Error / 2*pi')
ylabel('Frequency Error - Hz')
grid

% End of Postprocessor
```

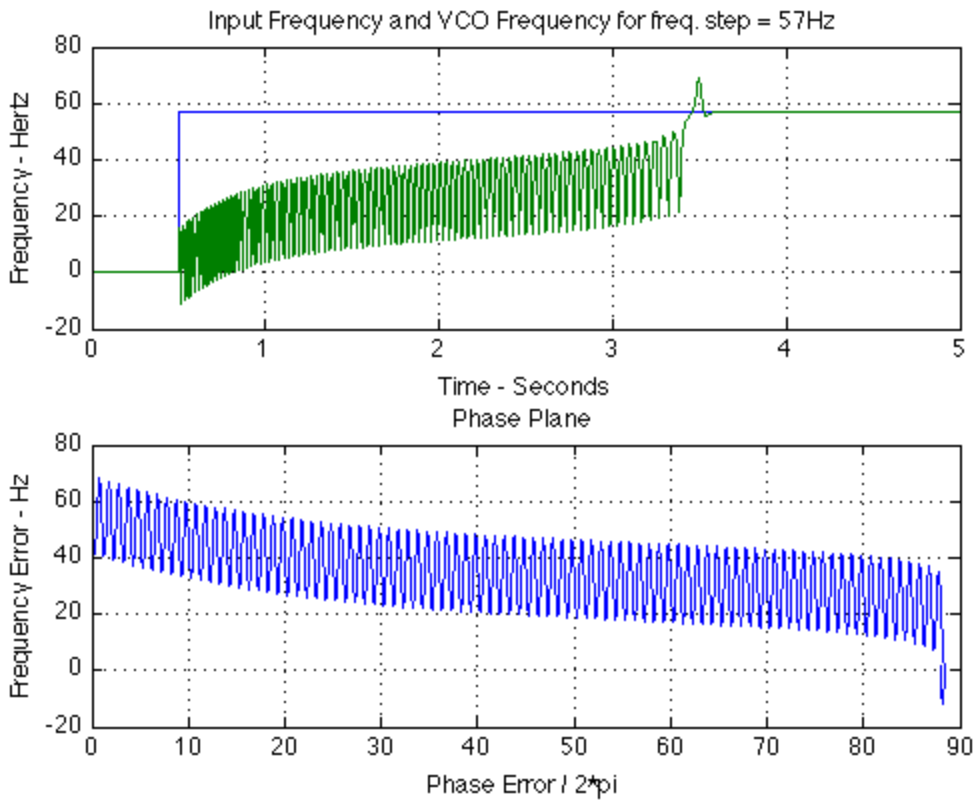

Published with MATLAB® 7.9

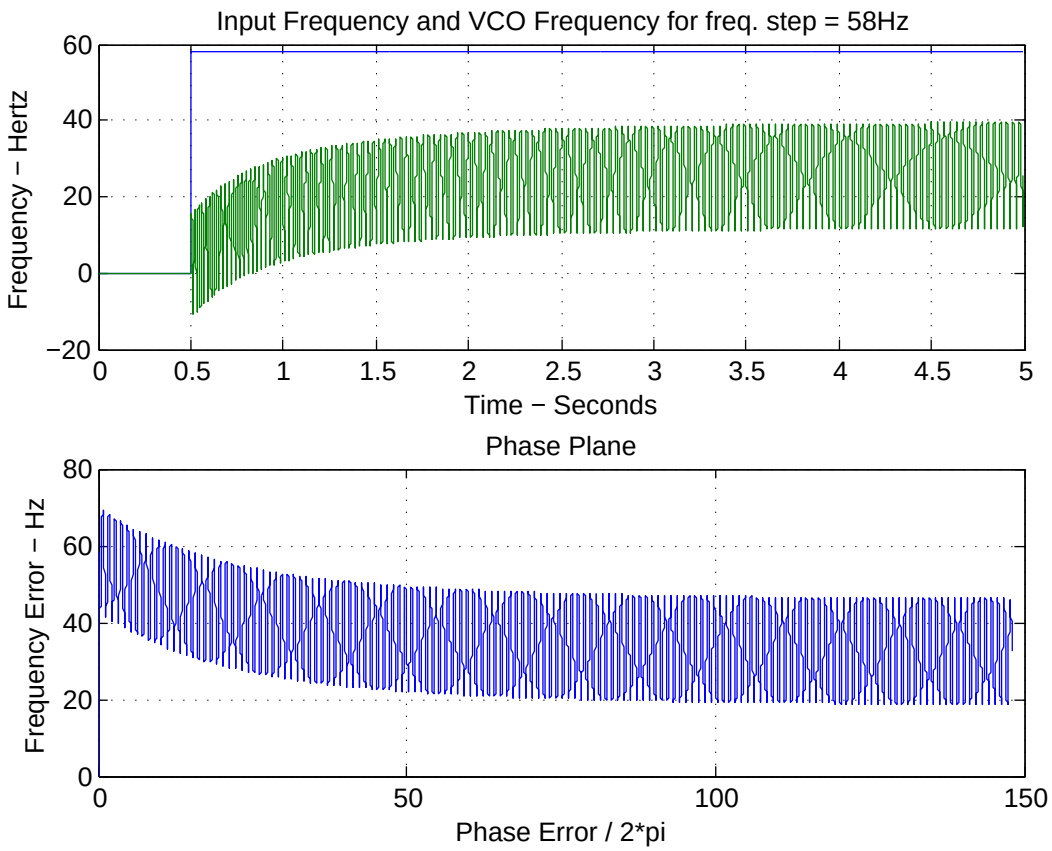
Input Frequency and VCO Frequency for freq. step = 58Hz
Frequency − Hertz
60
40
20
0
−20
0
0.5
1
1.5
2
2.5
3
3.5
4
4.5
5
Time − Seconds
Phase Plane
Frequency Error − Hz
80
60
40
20
0
0
50
100
150
Phase Error / 2*pi