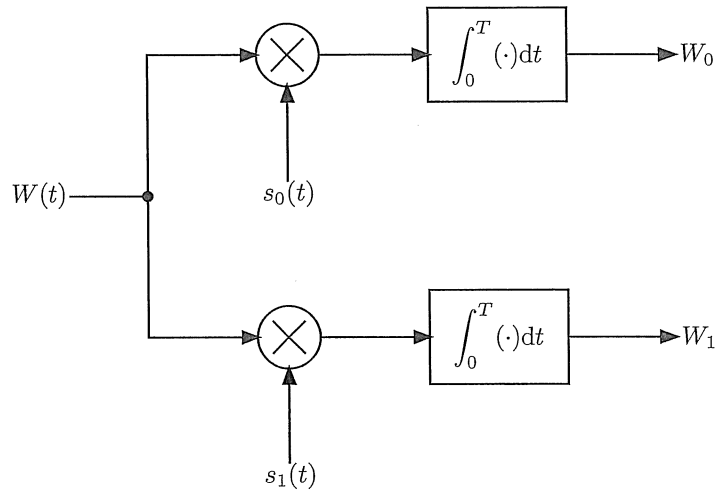

Problem 1. [20 pts. total] In the block diagram above $W(t)$ is a wide sense stationary, Gaussian random process with zero mean and a flat power spectral density of height $N_0/2$ (in other words, it is a white random process). The two signals $s_0(t)$ and $s_1(t)$ driving the correlator multipliers are nonzero only over the time interval $0 \leq t \leq T$. A pair of random variables W_0 and W_1 are output from the correlators.

(a) [5 pts.] Name the type of joint probability distribution of W_0 and W_1 and explain.

W_0 and W_1 are jointly Gaussian random variables.

- Multiplying a Gaussian r.p. by a deterministic time function results in a Gaussian r.p. In fact $s_0(t)W(t)$ and $s_1(t)W(t)$ are jointly Gaussian r.p.s.
- Linear operations, such as integration, on Gaussian rps produce Gaussian random variables.

(b) [15 pts.] From first principles derive the parameters needed to characterize the joint probability distribution of W_0 and W_1. They should be written in terms of the power spectral density height $N_0/2$, the correlation between the signals $s_0(t)$ and $s_1(t)$, and their energies.

The joint prob. distribution of W_0 and W_1 is Gaussian and therefore completely specified by

means EW_0, EW_1

variances $\mathrm{Var}\,W_0$, $\mathrm{Var}\,W_1$

correlation EW_0W_1

Proceed to find these.

Problem 1. (cont'd.)

Means :
$$EW_i = E\int_0^T W(t)\,s_i(t)\,dt = \int_0^T E\{W(t)\}\,s_i(t)\,dt$$
$$= 0 \quad \text{since } W(t) \text{ has zero mean}$$
$$i=0,1$$

Variances :
$$\operatorname{Var} W_i = E\{W_i^2\} = E\left\{\int_0^T W(t)\,s_i(t)\,dt \int_0^T W(s)\,s_i(s)\,ds\right\}$$
$$= E\int_0^T\int_0^T W(t)W(s)\,s_i(t)\,s_i(s)\,dt\,ds$$
$$= \int_0^T\int_0^T \underbrace{E\{W(t)W(s)\}}_{\frac{N_0}{2}\delta(t-s)}\,s_i(t)\,s_i(s)\,dt\,ds$$
$$= \frac{N_0}{2}\int_0^T s_i^2(t)\,dt = \frac{N_0}{2}\|s_i\|^2 \qquad i=0,1$$

Correlation :
$$EW_0W_1 = E\left\{\int_0^T W(t)\,s_0(t)\,dt \int_0^T W(s)\,s_1(s)\,ds\right\}$$
$$= \int_0^T\int_0^T \frac{N_0}{2}\delta(t-s)\,s_0(t)\,s_1(s)\,dt\,ds$$
$$= \frac{N_0}{2}\int_0^T s_0(t)\,s_1(t)\,dt = \frac{N_0}{2}\langle s_0, s_1\rangle.$$

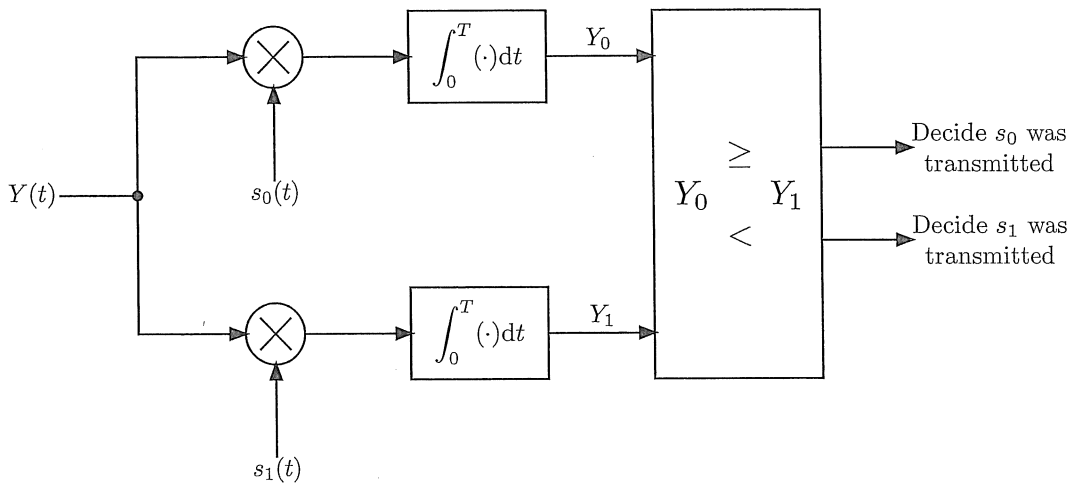

Problem 2. [45 pts. total] The receiver above is used to solve the hypothesis test:

$$\begin{array}{ll} H_0 : Y(t) = s_0(t) + W(t) & \\ \text{vs.} & ; \quad 0 \le t \le T, \\ H_1 : Y(t) = s_1(t) + W(t) & \end{array}$$

where $W(t)$ is a white, Gaussian random process with zero mean and auto-correlation $R_W(\tau) = 0.5N_0\delta(\tau)$, and signals $s_0(t)$ and $s_1(t)$ are given by:

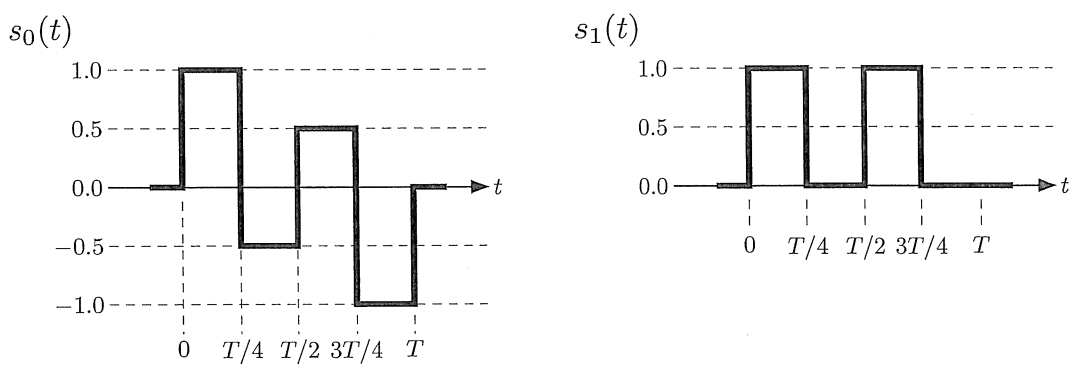

(a) [10 pts.] Characterize the joint distribution of Y_0 and Y_1, i.e., name it and write down its parameters, under hypothesis H_0.

Following the argument from Problem 1 and using linearity (signal & noise are added together under either hypothesis) we know that the joint dist. of Y_0 and Y_1 is Gaussian.

Thus to completely specify it we need only means, variances, and correlations. The means are due to the signals and so depend on which hypothesis is in force. The rest only depends on noise.

Problem 2. (cont'd.)

<u>Noise Part</u> Let W_0 and W_1 be the noise components in the rvs Y_0 and Y_1 ie

$$W_0 = \int_0^T W(t)\, s_0(t)\, dt, \quad W_1 = \int_0^T W(t)\, s_1(t)\, dt$$

as in Prob. 1 we have $EW_0 = EW_1 = 0$ and

$$E\{W_0^2\} = \operatorname{Var} W_0 = \frac{N_0}{2} \|s_0\|^2$$

$$E\{W_1^2\} = \operatorname{Var} W_1 = \frac{N_0}{2} \|s_1\|^2$$

$$E\{W_0 W_1\} = \frac{N_0}{2} \langle s_0, s_1 \rangle$$

For the pulses $s_0(\cdot)$ and $s_1(\cdot)$ given we have

$$\|s_0\|^2 = \int_0^T s_0^2(t)\, dt = 1 \cdot \frac{T}{4} + \left(-\frac{1}{2}\right)^2 \frac{T}{4} + \left(\frac{1}{2}\right)^2 \frac{T}{4} + (-1)^2 \frac{T}{4}$$

$$= \frac{5}{2} \cdot \frac{T}{4} = 5T/8$$

$$\|s_1\|^2 = \int_0^T s_1^2(t)\, dt = 1 \cdot \frac{T}{4} + 1 \cdot \frac{T}{4} = T/2$$

$$\langle s_0, s_1 \rangle = 1 \cdot \frac{T}{4} + \frac{1}{2} \frac{T}{4} = 3T/8$$

<u>Under H_0</u>

$$EY_0 = \int_0^T s_0^2(t)\, dt = 5T/8$$

$$EY_1 = \int_0^T s_0(t)\, s_1(t)\, dt = 3T/8$$

$$\therefore \quad Y_0 \sim N\left(\frac{5T}{8}, \frac{N_0}{2} \frac{5T}{8}\right)$$

$$Y_1 \sim N\left(\frac{3T}{8}, \frac{N_0}{2} \frac{T}{2}\right)$$

and the cross-cov is

$$\operatorname{Cov}\{Y_0, Y_1\} = \frac{N_0}{2} \frac{3T}{8}$$

Problem 2. (cont'd.)

(b) [10 pts.] Repeat part (a) under the assumption of hypothesis H_1.

The only change is to the mean.

<u>Under H_1</u>

$$E\{Y_0\} = \int_0^T s_1(t)\, s_0(t)\, dt = 3T/8$$

$$E\{Y_1\} = \int_0^T s_1^2(t)\, dt = T/2$$

$$\therefore \quad Y_0 \sim N\left(\frac{3T}{8}, \frac{N_0}{2}\frac{5T}{8}\right) \qquad Cov\{Y_0, Y_1\} = \frac{N_0}{2}\frac{3T}{8}$$

$$Y_1 \sim N\left(\frac{T}{2}, \frac{N_0}{2}\frac{T}{2}\right)$$

Problem 2. (cont'd.)

(c) [15 pts.] For the receiver given find the probability of error assuming H_0, i.e., $P_{e,0}$, the probability that the receiver chooses H_1 when H_0 is really true. Express your answer in terms of the Gaussian Q function, T, and N_0.

Assuming H_0 is true the receiver makes an error if it decides that H_1 was true. The event is

$$\{Y_0 < Y_1\}$$

$$\therefore P_{e,0} = P(Y_0 < Y_1 \mid H_0) = P(Y_1 - Y_0 > 0 \mid H_0)$$

Now under H_0: $Y_1 - Y_0 = \frac{3T}{8} + W_1 - \left(\frac{5T}{8} + W_0\right)$

$$= -\frac{2T}{8} + W_1 - W_0$$

$$\therefore P_{e,0} = P\left(W_1 - W_0 > \frac{2T}{8}\right)$$

$W_1 - W_0$ is Gaussian of mean zero. But to calculate its variance we will need to account for correlation:

$$\mathrm{Var}\{W_1 - W_0\} = E\{(W_1 - W_0)^2\} = E\{W_1^2\} + E\{W_0^2\} - 2E\{W_0 W_1\}$$

$$= \frac{N_0}{2}\cdot\frac{T}{2} + \frac{N_0}{2}\frac{5T}{8} - 2\frac{N_0}{2}\frac{3T}{8} = \frac{N_0}{2}\cdot\frac{T}{2}\left\{1 + \frac{5}{4} - 2\frac{3}{4}\right\}$$

$$= \frac{N_0 T}{4}\cdot\frac{3}{4} = 3N_0T/16$$

Then $$P_{e,0} = P\left(\frac{W_1 - W_0}{\sqrt{3N_0T/16}} > \frac{2T/8}{\sqrt{3N_0T/16}}\right) = Q\left(\frac{2T/8}{\sqrt{3N_0T/16}}\right)$$

$$= Q\left(\sqrt{\frac{T}{3N_0}}\right)$$

Problem 2. (cont'd.)

(d) [10 pts.] Evaluate the error probability from (c) using the table below for the case where $T = 9N_0$.

Table G.1 A Short Table of Q-Function Values

x	$Q(x)$	x	$Q(x)$	x	$Q(x)$
0	0.5	1.5	0.066807	3.0	0.0013499
0.1	0.46017	1.6	0.054799	3.1	0.00096760
0.2	0.42074	1.7	0.044565	3.2	0.00068714
0.3	0.38209	1.8	0.035930	3.3	0.00048342
0.4	0.34458	1.9	0.028717	3.4	0.00033693
0.5	0.30854	2.0	0.022750	3.5	0.00023263
0.6	0.27425	2.1	0.017864	3.6	0.00015911
0.7	0.24196	2.2	0.013903	3.7	0.00010780
0.8	0.21186	2.3	0.010724	3.8	7.2348×10^{-5}
0.9	0.18406	2.4	0.0081975	3.9	4.8096×10^{-5}
1.0	0.15866	2.5	0.0062097	4.0	3.1671×10^{-5}
1.1	0.13567	2.6	0.0046612	4.1	2.0658×10^{-5}
1.2	0.11507	2.7	0.0034670	4.2	1.3346×10^{-5}
1.3	0.096800	2.8	0.0025551	4.3	8.5399×10^{-6}
1.4	0.080757	2.9	0.0018658	4.4	5.4125×10^{-6}

If $T = 9N_0$

$$P_{e,0} = Q\left(\sqrt{\frac{9N_0}{3N_0}}\right) = Q(\sqrt{3}) \cong Q(1.73)$$

$$\cong 0.04$$

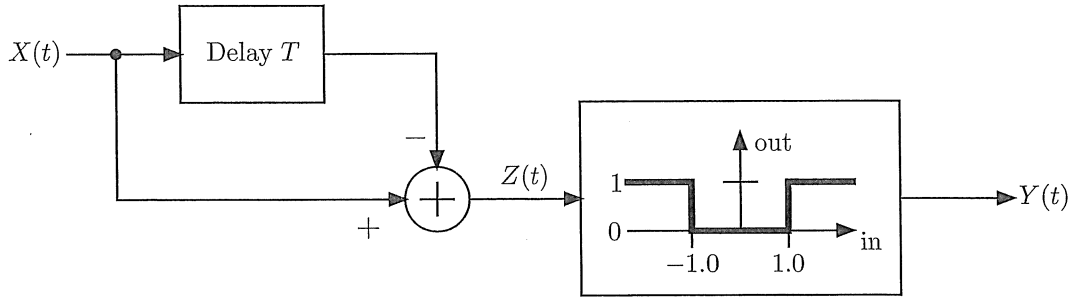

Problem 3. [35 pts. total] The input $X(t)$ to the system shown above is a zero mean, Gaussian random process, with triangularly shaped autocorrelation function:

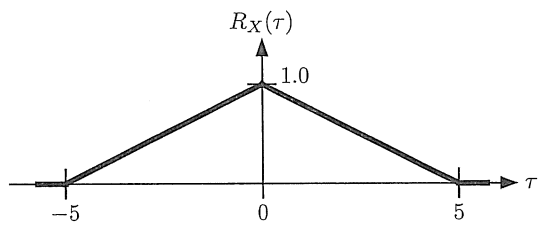

For $T = 2.5$ find the mean value $\mathrm{E}\{Y(t)\}$ of the random $0-1$ square wave at the output of the system. This mean value may be interpreted as the average duty cycle of the square wave $Y(t)$. Explain why. Finally, sketch a representative sample function for $Y(t)$.

$$Z(t) = X(t) - X(t-T)$$

Since $Z(t)$ is a linear combination of Gaussian random variables, it too is Gaussian and therefore $Z(t)$ is a Gaussian random process. Since

$$E\{Z(t)\} = E\{X(t)\} - E\{X(t-T)\} = 0 - 0$$

its mean is also zero.

Now

$$\begin{aligned}
\mathrm{Var}\{Z(t)\} &= E\{Z^2(t)\} \\
&= E\{(X(t) - X(t-T))^2\} \\
&= E\{X^2(t)\} + E\{X^2(t-T)\} - 2E\{X(t)X(t-T)\} \\
&= R_X(0) + R_X(0) - 2R_X(T) \\
&= 2[R_X(0) - R_X(T)]
\end{aligned}$$

Problem 3. (cont'd.)

Then for $T = 2.5$ have $R_X(2.5) = 0.5$. Similarly, $R_X(0) = 1$.

$$\Longrightarrow \operatorname{Var}\{Z(t)\} = 2(1 - 0.5) = 1$$

$\therefore$ For any time t $\quad Z(t) \sim N(0,1)$

Now
$$\begin{aligned}
E\{Y(t)\} &= P\{Y(t) = 1\} \\
&= P\{|Z(t)| > 1\} \\
&= 1 - P\{|Z(t)| \le 1\} \\
&= 1 - P\{-1 < Z(t) \le 1\} \qquad Z(t) \sim N(0,1) \\
&= 1 - [\Phi(1) - \Phi(-1)] \\
&= 1 - \Phi(1) + \Phi(-1) \\
&= 2\Phi(1) = 2 \cdot .15866
\end{aligned}$$

from Table.

$$\therefore E\{Y(t)\} = P\{Y(t) = 1\} \approx 0.32$$

Problem 3. (cont'd.)

The duty cycle interpretation works because $Y(t)$ is a binary wave.

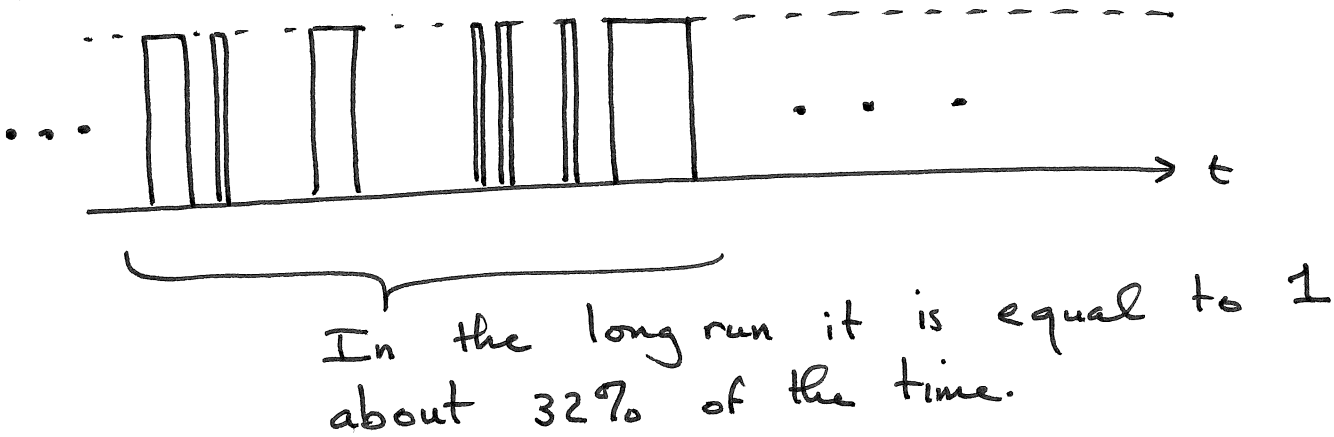

6.2 In Section 5.5, the notion of a vector space of functions is introduced, and the *norm* and *inner product* are defined for functions in this space. The waveforms that arise in the binary communication system can then be illustrated by two-dimensional sketches as in Figures 6-7(a) and 6-7(b), where we use this geometric approach to illustrate the projections of the signals $s_0(t)$ and $s_1(t)$ onto the reference signal $r(t)$. The geometric approach can also be applied to obtain an intuitive description of the operation performed by a correlation receiver for binary signaling on the AWGN channel. Let the sum of the received signal and the noise be $Y(t)$, and consider the receiver shown in Figure 5-16(c). In this receiver, the two correlators are used to form the statistics

$$W_0 = \int_{-\infty}^{\infty} Y(t)\, s_0(t)\, \mathrm{d}t \quad \text{and} \quad W_1 = \int_{-\infty}^{\infty} Y(t)\, s_1(t)\, \mathrm{d}t.$$

The optimum decision rule, as described in Section 5.5.4, is to decide that 0 was sent if $W_0 > W_1$, and to decide that 1 was sent if $W_1 > W_0$. (The event $W_1 = W_0$ has probability zero.) This rule decides in favor of the signal that has the larger correlation with the received waveform $Y(t)$. Written in vector notation, the decision rule is to decide that 0 was sent if $(Y, s_0) > (Y, s_1)$ and decide that 1 was sent if $(Y, s_1) > (Y, s_0)$. In parts **(a)** and **(b)**, assume that s_0 and s_1 have the same energy.

(a) Using the definition for the norm and inner product, show than an equivalent decision rule is to decide 0 was sent if $\|Y - s_0\| < \|Y - s_1\|$ and decide 1 was sent if $\|Y - s_0\| > \|Y - s_1\|$. Illustrate this fact geometrically. The *distance* between signals v_1 and v_2 is just $\|v_1 - v_2\|$, the norm of the difference between the two signals, so the conclusion is that the signal that has the largest correlation with the received waveform is the same as the signal that is closest to the received waveform.

(b) Apply the geometric viewpoint to the BPSK signal set defined by equations (6.3), and argue that an equivalent decision rule for this signal set is to determine the "phase" of the decision statistic and decide that 0 was sent if this phase is between $\varphi - (\pi/2)$ and $\varphi + (\pi/2)$ and 1 was sent if the phase is not in this range. In order to make this precise, how must the "phase" of the decision statistic be defined? *Hint*: The signals can be expressed as linear combinations of $\cos(\omega_c t)$ and $\sin(\omega_c t)$, and the operation of a correlation receiver matched to $\cos(\omega_c t + \varphi)$ can be expressed in terms of these two orthogonal functions. (What are the coefficients?) Assume that $\omega_c T$ is a multiple of 2π.

MBP 6.2

Fig. 5.16c :

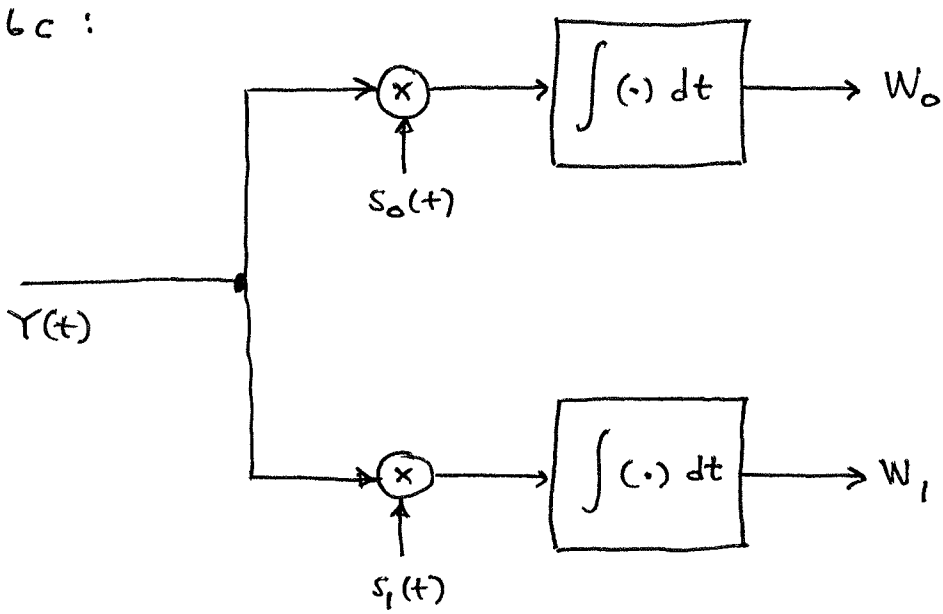

Opt. decision rule is

$$(Y, s_0) > (Y, s_1) \implies \text{decide } H_0$$

$$(Y, s_0) < (Y, s_1) \implies \text{decide } H_1$$

(a)
Show equivalence to rule based on norm

$$\|Y - s_0\| < \|Y - s_1\| \implies \text{decide } H_0.$$

$$\|Y - s_0\| > \|Y - s_1\| \implies \text{decide } H_1$$

and illustrate geometrically.

Suffices to show:

$$(Y, s_0) > (Y, s_1) \iff \|Y - s_0\| < \|Y - s_1\|$$
$$\iff \|Y - s_0\|^2 < \|Y - s_1\|^2$$

$$\begin{aligned}\|Y - s_0\|^2 &= (Y - s_0, Y - s_0) \\ &= (Y, Y) - (Y, s_0) - (s_0, Y) + (s_0, s_0) \\ &= \|Y\|^2 - 2(Y, s_0) + \|s_0\|^2\end{aligned}$$

$$\|Y - s_1\|^2 = \|Y\|^2 - 2(Y, s_1) + \|s_0\|^2$$

$$\|Y - s_0\|^2 < \|Y - s_1\|^2$$

$$\Updownarrow$$

$$\cancel{\|Y\|^2} - 2(Y, s_0) + \underbrace{\|s_0\|^2 < \cancel{\|Y\|^2} - 2(Y, s_1) + \|s_1\|^2}_{\text{assuming signals have same energy}}$$

$$\Updownarrow$$

$$(Y, s_0) > (Y, s_1)$$

Geometric Illustration

Signals s_0 and s_1 of identical energy must be on a circle centered at origin:

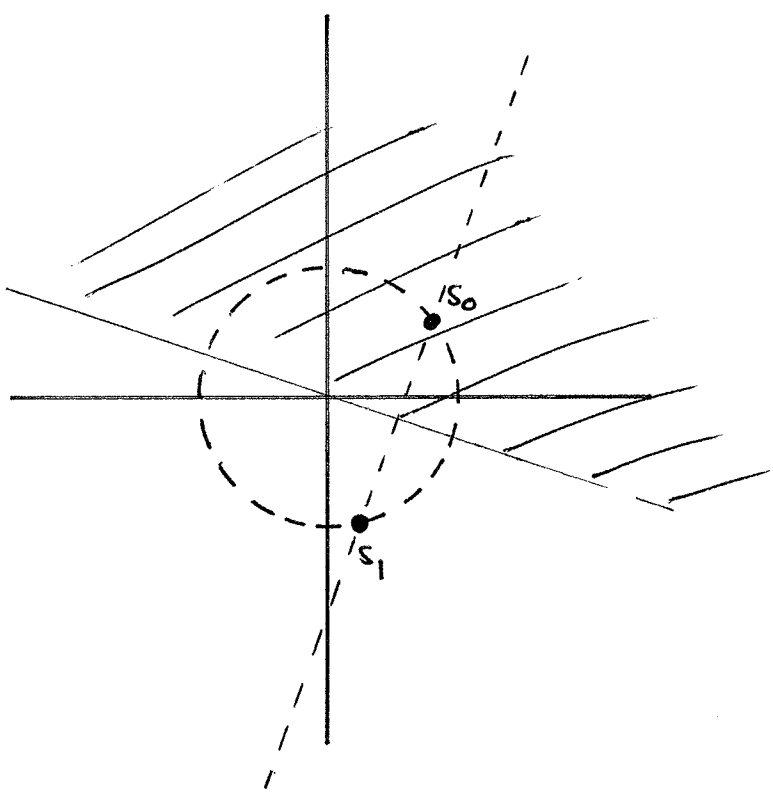

6.3 This problem deals with the phase ambiguity in the squaring loop described in Section 6.2.2.

(a) Ignore the effects of noise at the input to the squaring loop. Show that if the output of the VCO is

$$r(t) = \sqrt{2}\,\beta \cos(\omega_c t + \hat{\varphi})$$

and either $\hat{\varphi} = \varphi$ or $\hat{\varphi} = \varphi + \pi$, the loop is locked (i.e., the input to the VCO in the loop is zero). Thus, the loop "cannot tell" if there is a π-radian phase error in the output of the VCO.

(b) Suppose $r(t)$ is employed as a reference signal in a correlation receiver and the input to the receiver is $s_i(t) + X(t)$, as shown in Figure 6-6. Let Z be the decision statistic that results if $\hat{\varphi} = \varphi$. Show the decision statistic that results if $\hat{\varphi} = \varphi + \pi$ is $-Z$, so all decisions made by comparison with a zero threshold are reversed.

MBP 6.3

The squaring loop in question is that of Fig 6-9:

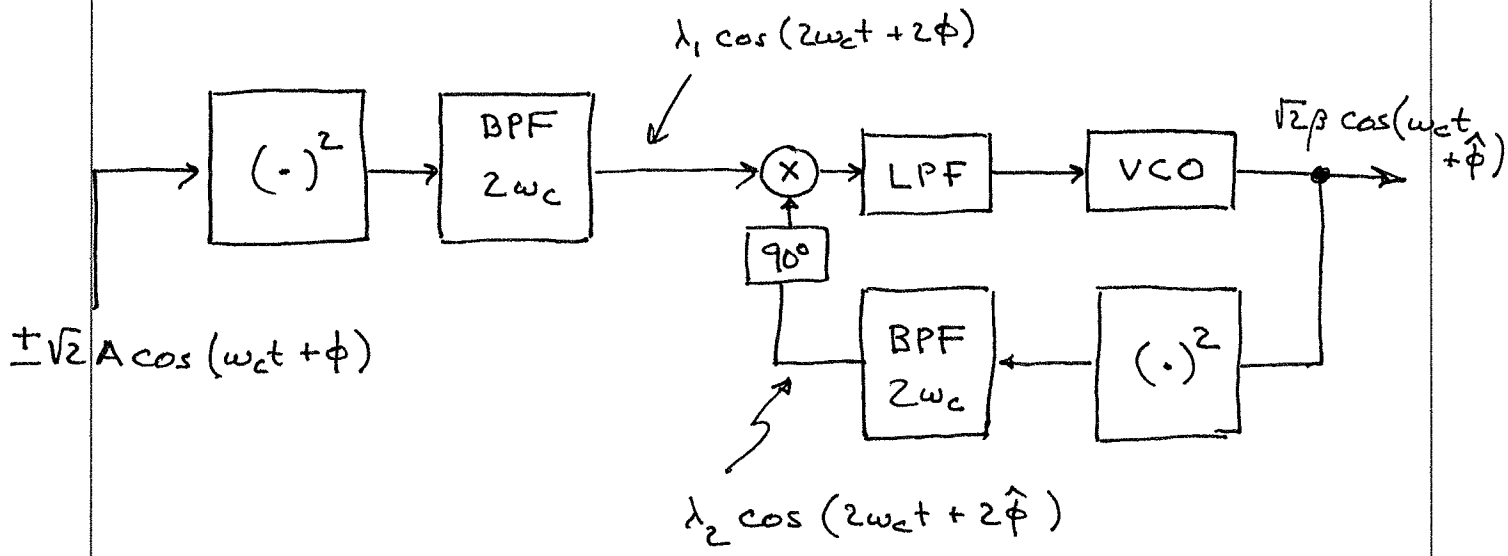

(a) Show that for either $\hat{\phi} = 0$ or $\hat{\phi} = \pi$ the loop is locked.

The inputs to the phase detector mixer are

$$\lambda_1 \cos(2\omega_c t + 2\phi)$$

and

$$\lambda_2 \sin(2\omega_c t + 2\hat{\phi})$$

Thus input to LPF is

$$\lambda_1 \lambda_2 \cos(2\omega_c t + 2\phi) \sin(2\omega_c t + 2\hat{\phi})$$

$$= \frac{\lambda_1 \lambda_2}{2} \left[-\sin 2(\phi - \hat{\phi}) + \sin(4\omega_c t + 2\phi + 2\hat{\phi}) \right]$$

Thus output of LPF (ie input to VCO) is

$$-\frac{\lambda_1 \lambda_2}{2} \sin 2(\phi - \hat{\phi})$$

There needs to be another sign change assuming that VCO freq. increases with pos. input voltage.

Hence assume there is such sign change. Then output of LPF is

$$\frac{\lambda_1 \lambda_2}{2} \sin 2(\phi - \hat{\phi}) = \begin{cases} 0 & \text{if } \hat{\phi} = \phi \\ 0 & \text{if } \hat{\phi} = \phi + \pi \end{cases}$$

$\Longrightarrow$ In either case the VCO input voltage is zero, ie locked.

(b) Now this derived carrier is used in

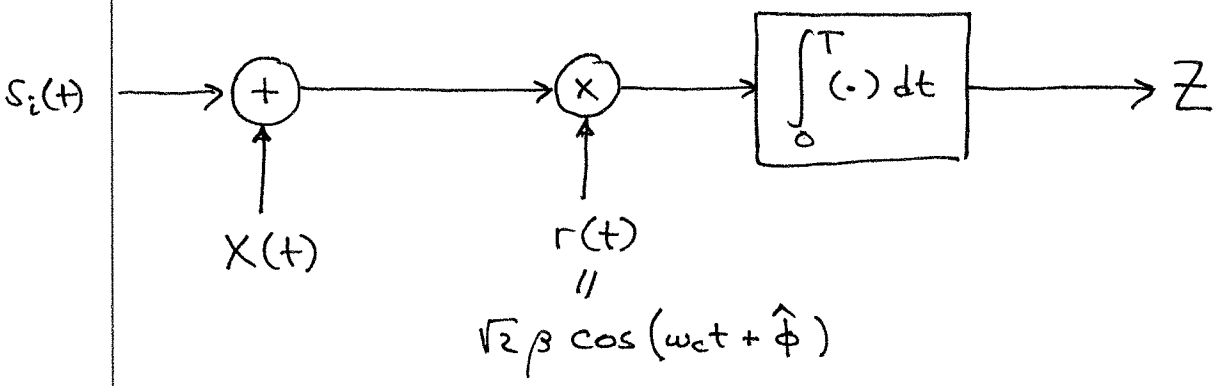

In class we showed that the decision statistic in case of imperfect phase ref. was

$$Z = \left\{ \begin{array}{c} \mu_0 = \beta A T \cos(\phi - \hat{\phi}) \\ \text{or} \\ \mu_1 = -\beta A T \cos(\phi - \hat{\phi}) \end{array} \right\} + \left\{ \begin{array}{c} \text{a zero mean} \\ \text{Gaussian r.v.} \\ \text{of variance} \\ \beta^2 N_0 T/2 \end{array} \right\}$$

Clearly

(i) $\phi = \hat{\phi} \Longrightarrow \mu_0 = \beta A T, \ \mu_1 = -\beta A T$

(ii) $\phi = \hat{\phi} - \pi \Longrightarrow \mu_0 = -\beta A T, \ \mu_1 = +\beta A T$

This shows the sign change expected.

6.7 Suppose the threshold for the receiver shown in Figure 6-12 is denoted by γ. The channel is an AWGN channel with spectral density $N_0/2$. Give expressions for $P_{e,0}$ and $P_{e,1}$ if the binary ASK signal set is

$$s_i(t) = \sqrt{2}\, A\, u_i\, p_T(t) \cos(\omega_c t + \varphi)$$

for $i = 0$ and $i = 1$ (i.e., $\beta(t) = p_T(t)$). Assume that $\omega_c \gg T^{-1}$ so that the double-frequency terms can be neglected. Express your answers in terms of the complementary Gaussian distribution function Q and the parameters u_0, u_1, γ, A, T, and N_0.

MBP 6.7

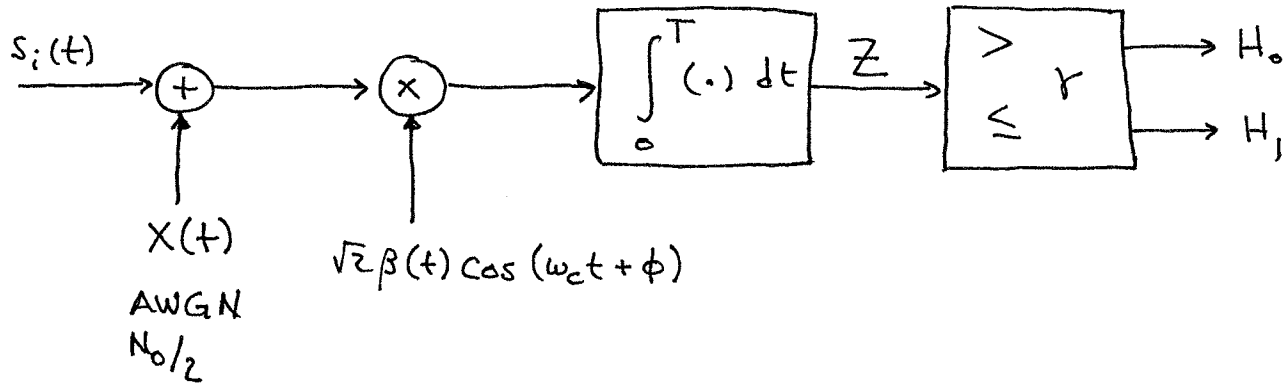

$$s_i(t) = u_i \sqrt{2}\, A\, p_T(t) \cos(\omega_c t + \phi) \qquad \left[\beta(t) = p_T(t)\right]$$

Say WLOG (without loss of generality) $u_0 > u_1$

Need to find statistical characterization of Z under the two hypotheses.

$$Z = u_i \int_0^T 2A \cos^2(\omega_c t + \phi)\, dt + \int_0^T X(t) \sqrt{2} \cos(\omega_c t + \phi)\, dt$$

$$= u_i AT + X$$

a zero mean, Gaussian r.v. with variance $N_0 T/2$

$$\therefore \quad Z \sim \begin{cases} N(u_0 AT, N_0T/2) & \text{under } H_0 \quad (u_0 > u_1) \\ N(u_1 AT, N_0T/2) & \text{" } H_1 \end{cases}$$

$$P_{e,0} = P(Z \leq \gamma \mid H_0)$$

$$= P\left(\frac{Z - u_0 AT}{\sqrt{N_0T/2}} \leq \frac{\gamma - u_0 AT}{\sqrt{N_0T/2}} \,\middle|\, H_0\right)$$

$$= \Phi\left(\frac{\gamma - u_0 AT}{\sqrt{N_0T/2}}\right) = Q\left(\frac{u_0 AT - \gamma}{\sqrt{N_0T/2}}\right)$$

$$P_{e,1} = P(Z > \gamma \mid H_1)$$

$$= P\left(\frac{Z - u_1 AT}{\sqrt{N_0 T/2}} > \frac{\gamma - u_1 AT}{\sqrt{N_0 T/2}} \;\middle|\; H_1 \right)$$

$$= Q\left(\frac{\gamma - u_1 AT}{\sqrt{N_0 T/2}} \right).$$