ECE 544 **Final Exam** **12/12/13**

Academic Honesty Statement: I am aware of the course policies concerning academic honesty for Professor Krogmeier's section of ECE 544. Furthermore, I promise that the work I am submitting with this exam is my own work.

Signature: _____

Name Printed: _____

General Instructions:

- **You have 2 hours to complete the exam.**
- Write your name on every page of the exam. Order your answers and number the pages. Do not write on the backs of the pages. Blank paper is supplied to you.
- The exam is open book and you may bring in one 8.5 by 11 inch cribsheet written in your own hand (no photocopiers) and covering both sides. You may use a calculator.
- Your work must be explained to receive full credit.
- Point values for each problem are as indicated. The exam totals 125 points of which a maximum of 100 points counts toward your grade.

Do not open the exam until you are told to begin.

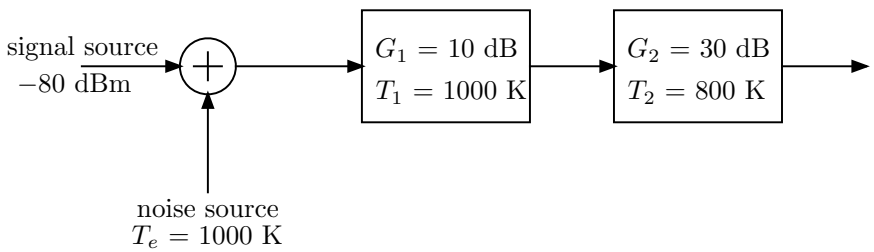

Problem 1. [10 pts.] Assuming a bandwidth of 10 MHz in the system above find the signal-to-noise power ratio at the output in dB. Boltzmann's constant is $k = 1.38 \times 10^{-23}$ J/K.

Problem 2. [10 pts.] Suppose a radio channel of bandwidth equal to 10 MHz, i.e., the channel passes frequencies f of the form

$$f_c - 5 \text{ MHz } \leq |f| \leq f_c - 5 \text{ MHz}$$

for some center frequency $f_c \gg 5$ MHz. We wish to use this channel for BPSK signalling where the transmitted signal is of the form

$$s(t) = \sqrt{2}A \sum_n d_n g(t - nT) \cos(2\pi f_c t)$$

and $g(t)$ is a baseband square-root raised cosine pulse with bandwidth expansion factor $\beta = 0.3$. Assume that the receiver uses filtering matched to the pulse $g(t)$ and that receiver-side symbol timing is perfect.

What is the maximum bit rate that can be supported provided that ISI free reception is required?

Problem 3. [15 pts.] Assume the setup of Problem 2 only now allow that the bandwidth expansion factor β may differ from 0.3. At the input to the receiver the signal-to-noise power ratio is defined to be

$$\text{SNR} \stackrel{\text{def}}{=} \frac{\text{Total signal power}}{\text{Noise power in the band}} = \frac{P_{sig}}{P_{noise}}$$

and $\text{SNR}_{dB} = 10\log_{10}(\text{SNR})$.

(a) If the signalling rate is chosen to be the maximum for ISI free reception find the general expression for the probability of error (for BPSK with equally likely symbols, received in AWGN, etc.) in terms of SNR and β. You may use the error probability formula $P_b = Q(\sqrt{\frac{2E_b}{N_0}})$.

(b) Then evaluate the error probability assuming SNR is equal to 5 dB and $\beta = 0.1$ using the curve below.

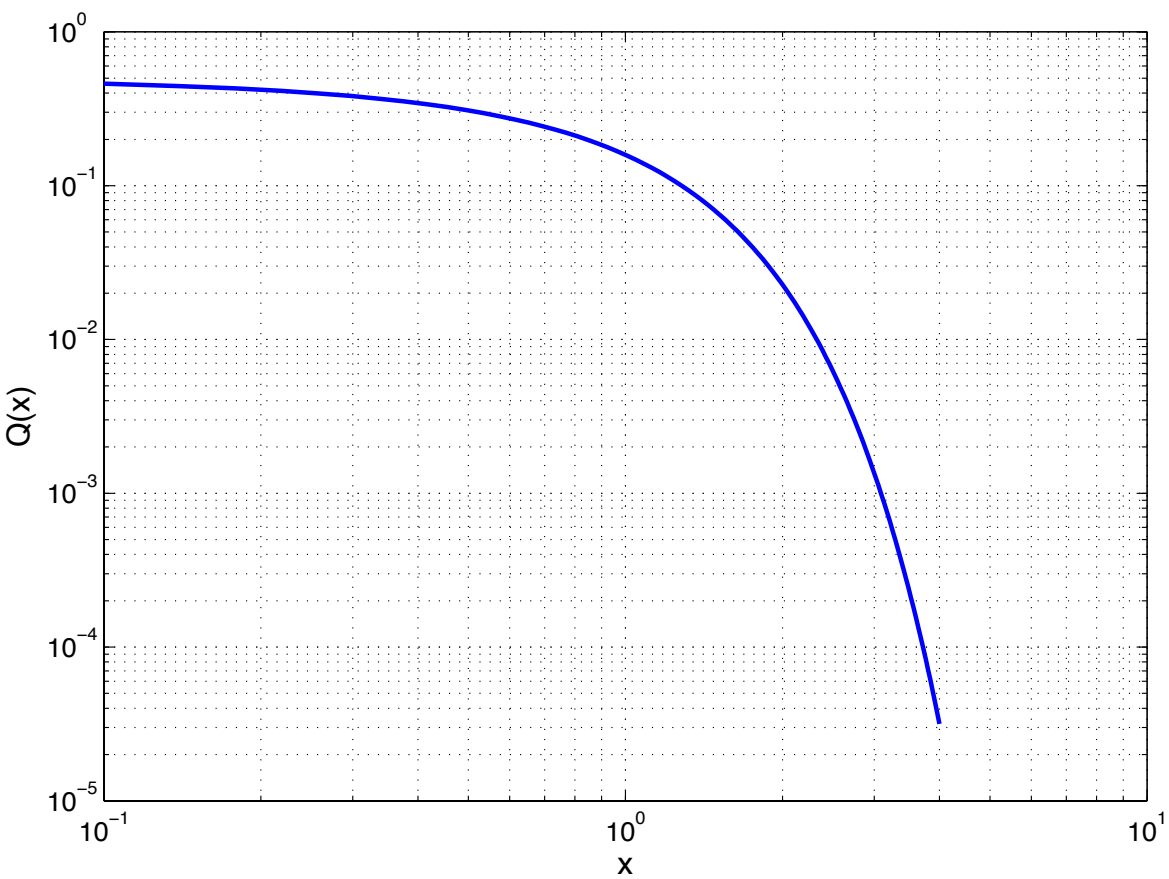

Problem 4. [10 pts. total] Let $s(t) = te^{-t}$ for $t \geq 0$ and $s(t) = 0$ for $t < 0$. Also let $X(t)$ be zero mean additive white Gaussian noise (AWGN) with power spectral density height $N_0/2$.

Find the joint probability distribution of the random variables X_0 and Y_0 at the outputs of the quadrature correlator shown below. You may assume that $f_c \gg 1$ Hz.

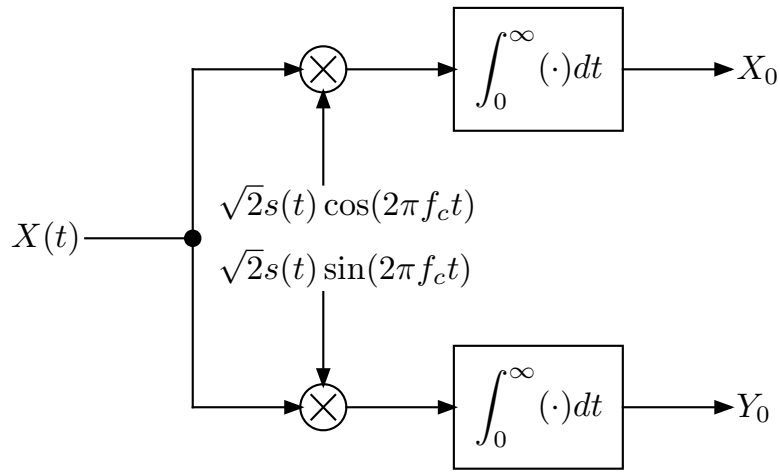

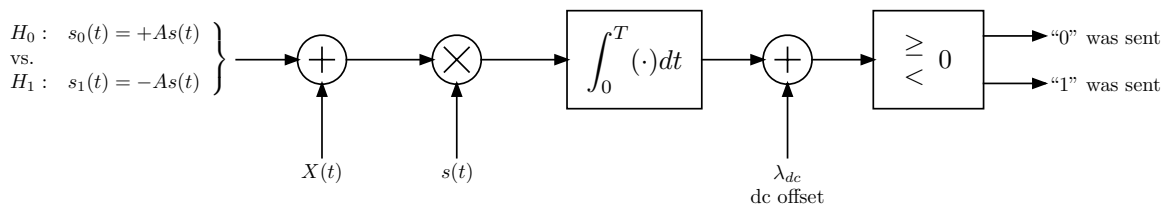

Problem 5. [10 pts. total] Consider the binary baseband communication problem indicated in the figure. The modulation is antipodal, the signal $s(t)$ has unit energy, i.e., $\int_0^T s^2(t)dt = 1$,the noise $X(t)$ is zero mean AWGN with two-sided power spectral density height $N_0/2$, and the two hypotheses are equally likely. The receiver has been designed to be optimal for minimizing the average probability of error but in implementation there is an undesired dc offset present at the output of the correlator: λ_{dc}. Find the average probability of error.

Problem 6. [20 pts. total] Recall the DBPSK encoder from homework where a string of input bits (i.e., 0 or 1) B_k produces a string of output bits D_k using the rule $D_k = B_k \oplus D_{k-1}$. The output string contains an extra digit D_{-1}, which is set as an initial condition of the encoder. The symbol "$\oplus$" in the encoder denotes modulo 2 binary addition (i.e., exclusive or). Suppose that the input bit string B_k is independent and identically distributed (i.i.d.) with

$$P(B_k = 1) = p \quad \text{and} \quad P(B_k = 0) = 1 - p.$$

(a) In the homework problem you assumed that the encoder initial state was $D_{-1} = 0$ and you found the marginal probability distribution of the encoder output for all time k, to be

$$q_k \stackrel{\text{def}}{=} P(D_k = 1) = \frac{1}{2}[1 - (1 - 2p)^{k+1}]$$

for $k \geq 0$.

Instead assume that the initial state is $D_{-1} = 1$ and solve for q_k, $k \geq 0$.

(b) In the homework problem you also showed for general p that the random variables $\{D_k : k \geq 0\}$ were not identically distributed or statistically independent.

However, using your result above, show that they are asymptotically identically distributed as $k \to \infty$ and find the asymptotic marginal distribution of the random variables.

(c) Prove that the sequence D_k is first order Markov[1] and specify its transition probabilities.

(d) What is the behavior of the joint distribution of D_k and D_{k+m} for large k and large m? Explain.

[1] i.e., show that

$$P(D_k = d_k | D_{k-1} = d_{k-1},\, D_{k-2} = d_{k-2},\, \ldots,\, D_0 = d_0) = P(D_k = d_k | D_{k-1} = d_{k-1})$$

for all $k \geq 1$ and all choices of $d_l = 0$ or 1, $0 \leq l \leq k$.

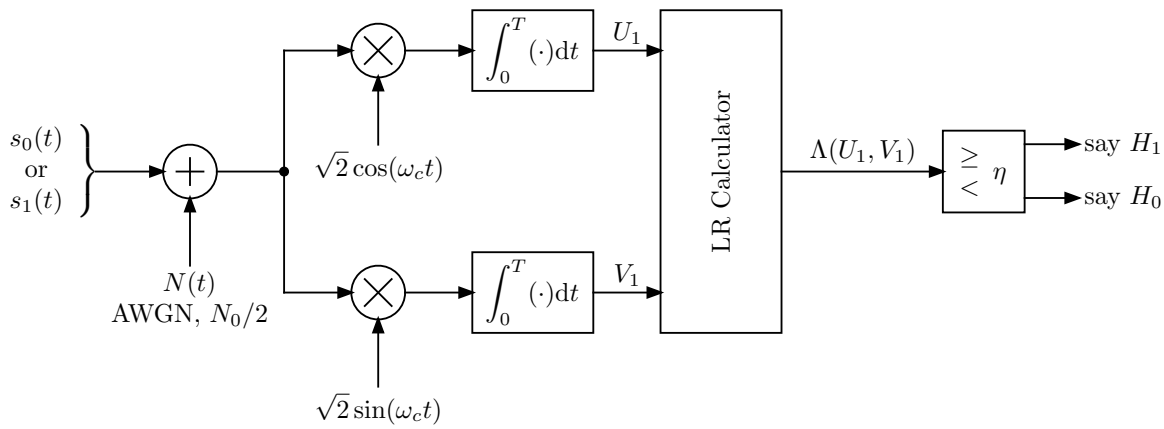

Problem 7. [50 pts. total] In on-off keying one binary bit is sent in each signalling interval of length T seconds using the two signals

$$\begin{aligned} H_0 : \ s_0(t) &= 0 \\ H_1 : \ s_1(t) &= \sqrt{2}A\cos(\omega_c t + \phi)p_T(t) \end{aligned}$$

which are assumed to be received in AWGN of power spectral density height $N_0/2$. The front-end architecture of the optimal receiver is as shown above (a fact we proved in class). Assume that $\omega_c T$ is a multiple of 2π. The goal of this problem is to work through the derivation and simplification of the standard likelihood ratio test statistic $\Lambda(u_1, v_1)$ starting from first principles.

(a) Characterize the joint probability distribution for random variables U_1 and V_1 under hypothesis H_0. You must explain the steps and work through all calculations. Write down the joint pdf $f_0(u_1, v_1)$ under H_0.

(b) Characterize the joint probability distribution for random variables U_1 and V_1 under hypothesis H_1 assuming that ϕ is a realization of a random variable Φ, which is uniform on $[0, 2\pi)$ and independent of the noise. You must explain the steps and work through all calculations. Write down the conditional joint pdf $f_1(u_1, v_1|\phi)$ under H_1.

(c) By averaging over the marginal density of Φ **prove**[2] that the unconditional joint pdf $f_1(u_1, v_1)$ under H_1 is of the form

$$f_1(u_1, v_1) = f_0(u_1, v_1)e^{-\alpha^2/2\sigma^2} I_0\left(\frac{\alpha}{\sigma^2}\sqrt{u_1^2 + v_1^2}\right)$$

where $I_0(z) \stackrel{\text{def}}{=} (1/2\pi)\int_0^{2\pi} \exp\{z\cos\theta\}\mathrm{d}\theta$ is a modified Bessel function of the first kind of order zero. Give expressions for α and σ^2 in terms of the signal and noise parameters.

Problem 7 continues on the next page.

[2] I'm serious about seeing all the steps worked out in this proof. If you don't show all of them the penalty will be severe!

Problem 7. (cont'd.)

(d) Write down the likelihood ratio test

$$\Lambda(u_1, v_1) \underset{<}{\overset{\geq}{}} \eta$$

and simplify. What is the value of η when the hypotheses are equally likely?

(e) Find an equivalent test which compares $r_1 = \sqrt{u_1^2 + v_1^2}$ to a different threshold (assuming equally likely hypotheses) and explain. How should one compute the new threshold and what information is needed to compute it?

(f) Explain how to compute the average probability of a bit error.