ECE 544 **Exam 1** **10/14/13**

Name: _____

General Instructions:

- **You have 90 minutes to complete the exam.**
- Write your name on every page of the exam.
- Do not write on the backs of the pages. If you need more paper, it will be provided to you upon request.
- The exam is closed book and closed notes.
- Calculators are allowed.
- Your work must be explained to receive full credit.
- Point values for each problem are as indicated. The exam totals 100 points.
- All plots must be carefully drawn with axes labeled.

Do not open the exam until you are told to begin.

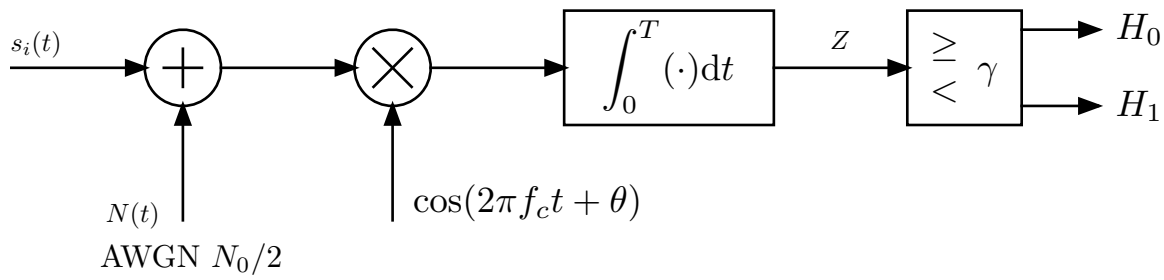

Problem 1. [40 pts. total] Consider the correlation receiver shown above. Assume that the two signals $s_0(t)$ and $s_1(t)$ are equally likely with $s_1(t) = 0$ and

$$s_0(t) = Ap_T(t)\cos(2\pi f_c t + \theta),$$

where $p_T(t) = 1$, for $0 \leq t \leq T$, and $p_T(t) = 0$, for $t < 0$ or $t > T$. Also assume that $f_c \gg T^{-1}$.

In this problem we will step through the choosing of an optimal threshold and the evaluation of the performance of the above communication system. For full credit you must work the steps as instructed.

(a) [10 pts.] Under the assumption that s_0 was transmitted (i.e., H_0) find the form of the probability distribution of the random variable Z and specify any parameters of the distribution in terms of the constants given in the problem statement. Explain.

Problem 1. (cont'd.)

(b) [10 pts.] Repeat part (a) assuming that s_1 was transmitted (i.e., H_1).

Problem 1. (cont'd.)

(c) [10 pts.] For a generic threshold γ find expressions for the conditional error probabilities $P_{e,0}$ and $P_{e,1}$ and write them in terms of the Gaussian Q function, the problem constants, and γ. Explain.

Problem 1. (cont'd.)

(d) [10 pts.] Find the value of the threshold γ (i.e., derive it), which minimizes the average probability of error. Also find the resulting minimum average probability of error. Explain.

Problem 1. (cont'd.)

Problem 2. [40 pts. total] Let $n(t)$ be a wide-sense stationary (WSS), zero-mean random process obtained by filtering white Gaussian noise with an ideal bandpass filter. That is, its power spectral density is of the form (assume that $f_c \gg W$):

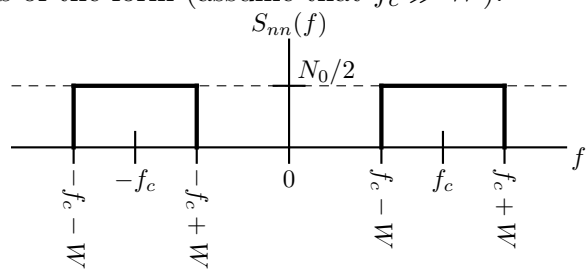

The purpose of this problem is to work out a small part of the proof of the theorem below:

Theorem: Let $n(t)$ be as above. Then it may be expressed in the form

$$n(t) = x(t)\cos(2\pi f_c t + \theta) + y(t)\sin(2\pi f_c t + \theta)$$

where: 1) the equality is interpreted in mean-square[1], 2) $x(\cdot)$ and $y(\cdot)$ are jointly WSS, Gaussian, zero-mean with identical psds, which do not depend on θ, and 3) $x(\cdot)$ and $y(\cdot)$ are statistically independent random processes.

For notational simplicity define $P_W(f) = 1$, for $|f| \leq W$, and $P_W(f) = 0$, for $|f| > W$, let $p_W(t) \leftrightarrow P_W(f)$, and write

$$S_{nn}(f) = \frac{N_0}{2} P_W(f - f_c) + \frac{N_0}{2} P_W(f + f_c).$$

For the questions on the pages to follow refer to the down-converter shown below.

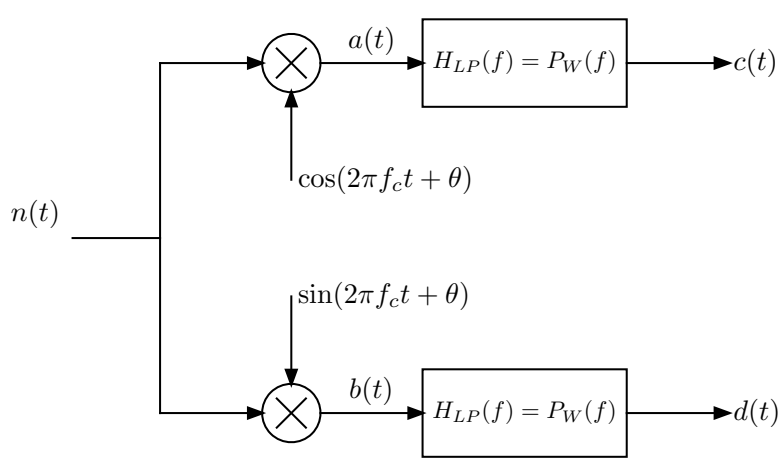

[1] i.e.,

$$\mathrm{E}\{[n(t) - x(t)\cos(2\pi f_c t + \theta) - y(t)\sin(2\pi f_c t + \theta)]^2\} = 0$$

for all t.

Problem 2. (cont'd.)

(a) [5 pts.] With $R_{ab}(t,s) = \mathrm{E}\{a(t)b(s)\}$ and similarly for $R_{cd}(t,s)$ show that

$$R_{cd}(t,s) = \int_{-\infty}^{\infty}\int_{-\infty}^{\infty} R_{ab}(u,v)p_W(t-u)p_W(s-v)\mathrm{d}u\mathrm{d}v.$$

Problem 2. (cont'd.)

(b) [5 pts.] By writing the double integral from part (a) as an iterated integral show that it can be viewed as the cascade of two LTI systems, one operating on the "s" variable and the other operating on the "t" variable as in the block diagram:

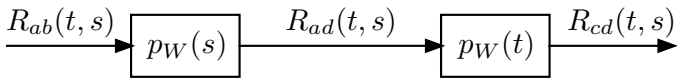

Problem 2. (cont'd.)

(c) [10 pts.] Find $R_{ab}(t, s)$ in terms of the sinusoids and the autocorrelation $R_{nn}(t, s) = R_{nn}(s - t)$.

Problem 2. (cont'd.)

(d) [20 pts.] Use Fourier Transform methods to find $R_{cd}(t, s)$ by carrying out the following steps.

1. Find the Fourier Transform of $R_{ab}(t, s)$ with respect to s and let ν denote the frequency variable. Multiply the resulting transform by $P_W(\nu)$.
2. Find the inverse Fourier Transform of the product above in order to find $R_{ad}(t, s)$.
3. Find the Fourier Transform of $R_{ad}(t, s)$ with respect to t and let f denote the frequency variable. Multiply the resulting transform by $P_W(f)$.
4. Find the inverse Fourier Transform of the product above in order to find $R_{cd}(t, s)$.

Problem 2. (cont'd.)

Problem 2. (cont'd.)

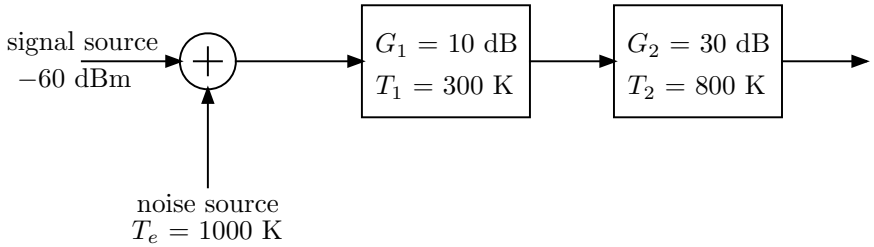

Problem 3. [20 pts. total] Assuming a bandwidth of 100 kHz in the system above find the signal-to-noise power ratio at the output in dB. Boltzmann's constant is $k = 1.38 \times 10^{-23}$ J/K.

Problem 3. (cont'd.)

Table XIII.2—Properties of Fourier Transforms

	$x(t) = \int_{-\infty}^{\infty} X(f) e^{j2\pi ft}\, df$	$X(f) = \int_{-\infty}^{\infty} x(t) e^{-j2\pi ft}\, dt$
Conjugate Symmetry	$\Im m[x(t)] = 0$ (i.e., $x(t)$ is real)	$X(f) = X^*(-f)$ (i.e., $\Re e[X(f)] = \Re e[X(-f)]$, $\Im m[X(f)] = -\Im m[X(-f)]$)
Even Symmetry	$x(t) = x(-t)$	$X(f) = X(-f)$
Odd Symmetry	$x(t) = -x(-t)$	$X(f) = -X(-f)$
Linearity	$ax_1(t) + bx_2(t)$	$aX_1(f) + bX_2(f)$
Duality	$X(t)$	$x(-f)$
Scale Change	$x(at)$	$\frac{1}{\lvert a\rvert} X(f/a)$
Time Delay	$x(t - t_0)$	$e^{-j2\pi f t_0} X(f)$
Times $e^{j2\pi f_0 t}$	$e^{j2\pi f_0 t} x(t)$	$X(f - f_0)$
Differentiation	$\frac{dx(t)}{dt}$	$j2\pi f X(f)$
Times t	$tx(t)$	$\frac{1}{-j2\pi} \frac{dX(f)}{df}$
Convolution	$\int_{-\infty}^{\infty} w(\tau) v(t-\tau)\, d\tau$	$W(f)V(f)$
Product	$w(t)v(t)$	$\int_{-\infty}^{\infty} W(\nu) V(f-\nu)\, d\nu$
Integration	$\int_{-\infty}^{t} x(\tau)\, d\tau$	$\frac{X(f)}{j2\pi f} + \frac{X(0)\delta(f)}{2}$

Other formulas:

$$X(0) = \int_{-\infty}^{\infty} x(t)\, dt; \qquad x(0) = \int_{-\infty}^{\infty} X(f)\, df$$

$$\int_{-\infty}^{\infty} |x(t)|^2\, dt = \int_{-\infty}^{\infty} |X(f)|^2\, df \qquad \text{(Parseval)}$$

$$\int_{-\infty}^{\infty} x(t) y^*(t+\tau) e^{-j2\pi\nu t}\, dt = \int_{-\infty}^{\infty} X(f+\nu) Y^*(f) e^{-j2\pi f\tau}\, df$$

Trig. Identities

$$
\begin{aligned}
e^{j\alpha} &= \cos(\alpha) + j\sin(\alpha) \\
\cos(\alpha) &= \frac{1}{2}(e^{j\alpha} + e^{-j\alpha}) \\
\sin(\alpha) &= \frac{1}{2j}(e^{j\alpha} - e^{-j\alpha}) \\
\sin(\alpha+\beta) &= \sin(\alpha)\cos(\beta) + \cos(\alpha)\sin(\beta) \\
\cos(\alpha+\beta) &= \cos(\alpha)\cos(\beta) - \sin(\alpha)\sin(\beta) \\
\sin(\alpha)\sin(\beta) &= \frac{1}{2}\cos(\alpha-\beta) - \frac{1}{2}\cos(\alpha+\beta) \\
\cos(\alpha)\cos(\beta) &= \frac{1}{2}\cos(\alpha-\beta) + \frac{1}{2}\cos(\alpha+\beta) \\
\sin(\alpha)\cos(\beta) &= \frac{1}{2}\sin(\alpha-\beta) + \frac{1}{2}\sin(\alpha+\beta) \\
\sin^2(\alpha) &= \frac{1}{2}[1 - \cos(2\alpha)] \\
\cos^2(\alpha) &= \frac{1}{2}[1 + \cos(2\alpha)]
\end{aligned}
$$