ECE 544 Exam 1 10/10/14

Name: Solution

General Instructions:

- **You have 50 minutes to complete the exam.**
- Write your name on every page of the exam.
- Do not write on the backs of the pages. If you need more paper, it will be provided to you upon request.
- The exam is closed book and closed notes.
- Calculators are allowed.
- Your work must be explained to receive full credit.
- Point values for each problem are as indicated. The exam totals 100 points.
- All plots must be carefully drawn with axes labeled.

Do not open the exam until you are told to begin.

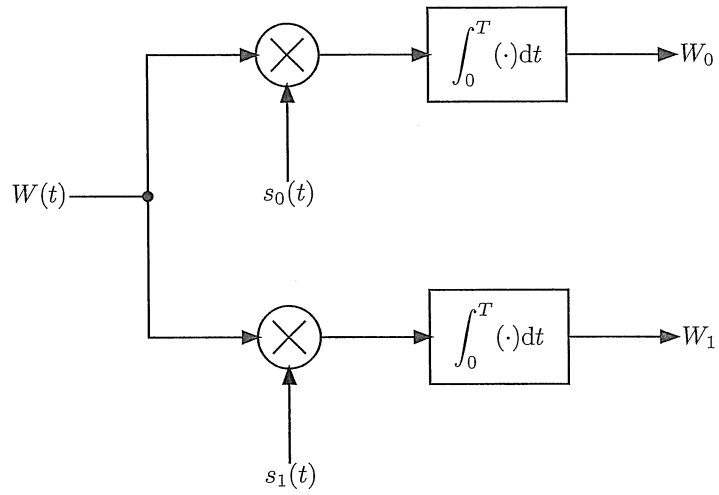

Problem 1. [20 pts. total] In the block diagram above $W(t)$ is a wide sense stationary, Gaussian random process with zero mean and a flat power spectral density of height $N_0/2$ (in other words, it is a white random process). The two signals $s_0(t)$ and $s_1(t)$ driving the correlator multipliers are nonzero only over the time interval $0 \leq t \leq T$. A pair of random variables W_0 and W_1 are output from the correlators.

(a) [5 pts.] Name the type of joint probability distribution of W_0 and W_1 and explain.

W_0 and W_1 are jointly Gaussian random variables.

- Multiplying a Gaussian r.p. by a deterministic time function results in a Gaussian r.p. In fact $s_0(t)W(t)$ and $s_1(t)W(t)$ are jointly Gaussian r.p.s.
- Linear operations, such as integration, on Gaussian rps produce Gaussian random variables.

(b) [15 pts.] From first principles derive the parameters needed to characterize the joint probability distribution of W_0 and W_1. They should be written in terms of the power spectral density height $N_0/2$, the correlation between the signals $s_0(t)$ and $s_1(t)$, and their energies.

The joint prob. distribution of W_0 and W_1 is Gaussian and therefore completely specified by

means EW_0, EW_1

variances $\mathrm{Var}\,W_0$, $\mathrm{Var}\,W_1$

correlation EW_0W_1

Proceed to find these.

Problem 1. (cont'd.)

Means :
$$EW_i = E\int_0^T W(t)\,s_i(t)\,dt = \int_0^T E\{W(t)\}\,s_i(t)\,dt$$
$$= 0 \quad \text{since } W(t) \text{ has zero mean}$$
$$i=0,1$$

Variances :
$$\operatorname{Var} W_i = E\{W_i^2\} = E\left\{\int_0^T W(t)\,s_i(t)\,dt \int_0^T W(s)\,s_i(s)\,ds\right\}$$
$$= E\int_0^T\int_0^T W(t)W(s)\,s_i(t)\,s_i(s)\,dt\,ds$$
$$= \int_0^T\int_0^T \underbrace{E\{W(t)W(s)\}}_{\frac{N_0}{2}\delta(t-s)}\,s_i(t)\,s_i(s)\,dt\,ds$$
$$= \frac{N_0}{2}\int_0^T s_i^2(t)\,dt = \frac{N_0}{2}\|s_i\|^2 \qquad i=0,1$$

Correlation :
$$EW_0W_1 = E\left\{\int_0^T W(t)\,s_0(t)\,dt \int_0^T W(s)\,s_1(s)\,ds\right\}$$
$$= \int_0^T\int_0^T \frac{N_0}{2}\delta(t-s)\,s_0(t)\,s_1(s)\,dt\,ds$$
$$= \frac{N_0}{2}\int_0^T s_0(t)\,s_1(t)\,dt = \frac{N_0}{2}\langle s_0, s_1\rangle.$$

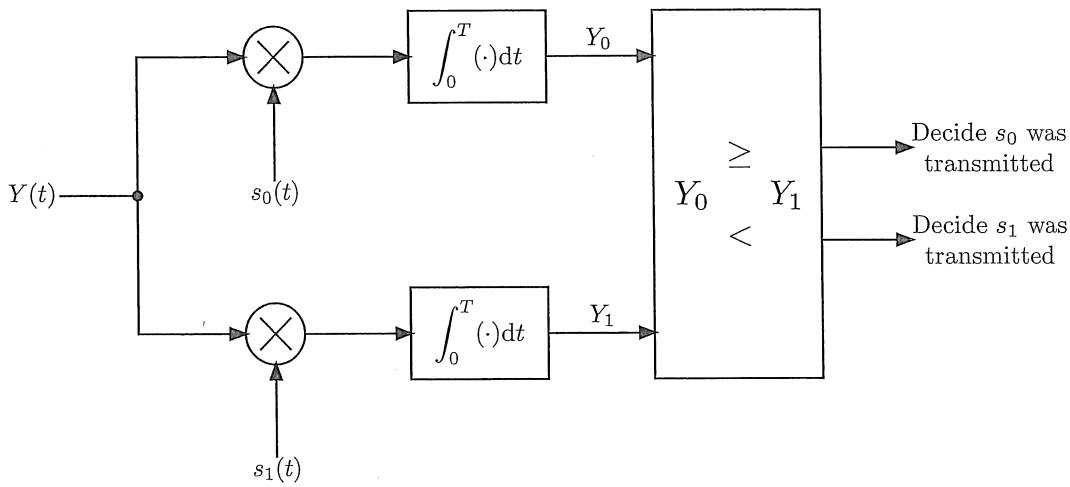

Problem 2. [45 pts. total] The receiver above is used to solve the hypothesis test:

$$\begin{array}{ll} H_0 : Y(t) = s_0(t) + W(t) & \\ \text{vs.} & ; \quad 0 \le t \le T, \\ H_1 : Y(t) = s_1(t) + W(t) & \end{array}$$

where $W(t)$ is a white, Gaussian random process with zero mean and auto-correlation $R_W(\tau) = 0.5N_0\delta(\tau)$, and signals $s_0(t)$ and $s_1(t)$ are given by:

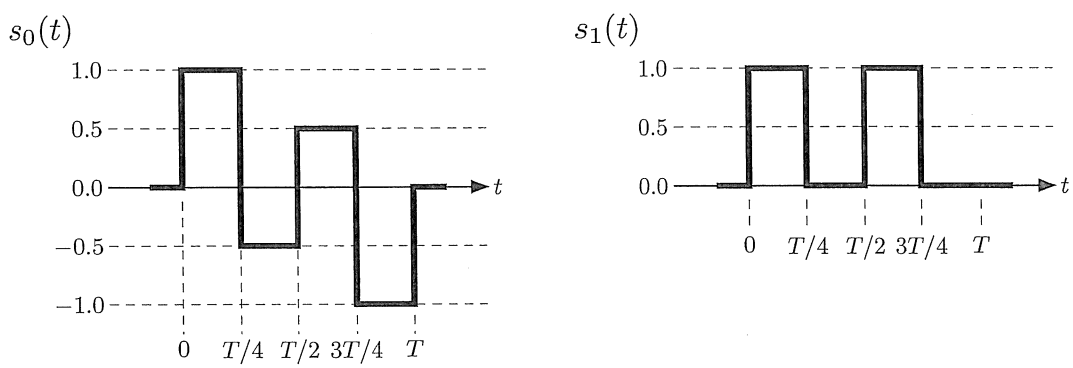

(a) [10 pts.] Characterize the joint distribution of Y_0 and Y_1, i.e., name it and write down its parameters, under hypothesis H_0.

Following the argument from Problem 1 and using linearity (signal & noise are added together under either hypothesis) we know that the joint dist. of Y_0 and Y_1 is Gaussian.

Thus to completely specify it we need only means, variances, and correlations. The means are due to the signals and so depend on which hypothesis is in force. The rest only depends on noise.

Problem 2. (cont'd.)

<u>Noise Part</u> Let W_0 and W_1 be the noise components in the rvs Y_0 and Y_1 ie

$$W_0 = \int_0^T W(t)\, s_0(t)\, dt, \quad W_1 = \int_0^T W(t)\, s_1(t)\, dt$$

as in Prob. 1 we have $EW_0 = EW_1 = 0$ and

$$E\{W_0^2\} = \operatorname{Var} W_0 = \frac{N_0}{2} \|s_0\|^2$$

$$E\{W_1^2\} = \operatorname{Var} W_1 = \frac{N_0}{2} \|s_1\|^2$$

$$E\{W_0 W_1\} = \frac{N_0}{2} \langle s_0, s_1 \rangle$$

For the pulses $s_0(\cdot)$ and $s_1(\cdot)$ given we have

$$\|s_0\|^2 = \int_0^T s_0^2(t)\, dt = 1 \cdot \frac{T}{4} + \left(-\frac{1}{2}\right)^2 \frac{T}{4} + \left(\frac{1}{2}\right)^2 \frac{T}{4} + (-1)^2 \frac{T}{4}$$

$$= \frac{5}{2} \cdot \frac{T}{4} = 5T/8$$

$$\|s_1\|^2 = \int_0^T s_1^2(t)\, dt = 1 \cdot \frac{T}{4} + 1 \cdot \frac{T}{4} = T/2$$

$$\langle s_0, s_1 \rangle = 1 \cdot \frac{T}{4} + \frac{1}{2} \frac{T}{4} = 3T/8$$

<u>Under H_0</u>

$$EY_0 = \int_0^T s_0^2(t)\, dt = 5T/8$$

$$EY_1 = \int_0^T s_0(t)\, s_1(t)\, dt = 3T/8$$

$$\therefore \quad Y_0 \sim N\left(\frac{5T}{8}, \frac{N_0}{2} \frac{5T}{8}\right)$$

$$Y_1 \sim N\left(\frac{3T}{8}, \frac{N_0}{2} \frac{T}{2}\right)$$

and the cross-cov is

$$\operatorname{Cov}\{Y_0, Y_1\} = \frac{N_0}{2} \frac{3T}{8}$$

Problem 2. (cont'd.)

(b) [10 pts.] Repeat part (a) under the assumption of hypothesis H_1.

The only change is to the mean.

<u>Under H_1</u>

$$E\{Y_0\} = \int_0^T s_1(t)\, s_0(t)\, dt = 3T/8$$

$$E\{Y_1\} = \int_0^T s_1^2(t)\, dt = T/2$$

$$\therefore \quad Y_0 \sim N\left(\frac{3T}{8}, \frac{N_0}{2}\frac{5T}{8}\right) \qquad Cov\{Y_0, Y_1\} = \frac{N_0}{2}\frac{3T}{8}$$

$$Y_1 \sim N\left(\frac{T}{2}, \frac{N_0}{2}\frac{T}{2}\right)$$

Problem 2. (cont'd.)

(c) [15 pts.] For the receiver given find the probability of error assuming H_0, i.e., $P_{e,0}$, the probability that the receiver chooses H_1 when H_0 is really true. Express your answer in terms of the Gaussian Q function, T, and N_0.

Assuming H_0 is true the receiver makes an error if it decides that H_1 was true. The event is

$$\{Y_0 < Y_1\}$$

$$\therefore P_{e,0} = P(Y_0 < Y_1 \mid H_0) = P(Y_1 - Y_0 > 0 \mid H_0)$$

Now under H_0: $Y_1 - Y_0 = \frac{3T}{8} + W_1 - \left(\frac{5T}{8} + W_0\right)$

$$= -\frac{2T}{8} + W_1 - W_0$$

$$\therefore P_{e,0} = P\left(W_1 - W_0 > \frac{2T}{8}\right)$$

$W_1 - W_0$ is Gaussian of mean zero. But to calculate its variance we will need to account for correlation:

$$\mathrm{Var}\{W_1 - W_0\} = E\{(W_1 - W_0)^2\} = E\{W_1^2\} + E\{W_0^2\} - 2E\{W_0 W_1\}$$

$$= \frac{N_0}{2}\cdot\frac{T}{2} + \frac{N_0}{2}\frac{5T}{8} - 2\frac{N_0}{2}\frac{3T}{8} = \frac{N_0}{2}\cdot\frac{T}{2}\left\{1 + \frac{5}{4} - 2\frac{3}{4}\right\}$$

$$= \frac{N_0 T}{4}\cdot\frac{3}{4} = 3N_0T/16$$

Then $$P_{e,0} = P\left(\frac{W_1 - W_0}{\sqrt{3N_0T/16}} > \frac{2T/8}{\sqrt{3N_0T/16}}\right) = Q\left(\frac{2T/8}{\sqrt{3N_0T/16}}\right)$$

$$= Q\left(\sqrt{\frac{T}{3N_0}}\right)$$

Problem 2. (cont'd.)

(d) [10 pts.] Evaluate the error probability from (c) using the table below for the case where $T = 9N_0$.

Table G.1 A Short Table of Q-Function Values

x	$Q(x)$	x	$Q(x)$	x	$Q(x)$
0	0.5	1.5	0.066807	3.0	0.0013499
0.1	0.46017	1.6	0.054799	3.1	0.00096760
0.2	0.42074	1.7	0.044565	3.2	0.00068714
0.3	0.38209	1.8	0.035930	3.3	0.00048342
0.4	0.34458	1.9	0.028717	3.4	0.00033693
0.5	0.30854	2.0	0.022750	3.5	0.00023263
0.6	0.27425	2.1	0.017864	3.6	0.00015911
0.7	0.24196	2.2	0.013903	3.7	0.00010780
0.8	0.21186	2.3	0.010724	3.8	7.2348×10^{-5}
0.9	0.18406	2.4	0.0081975	3.9	4.8096×10^{-5}
1.0	0.15866	2.5	0.0062097	4.0	3.1671×10^{-5}
1.1	0.13567	2.6	0.0046612	4.1	2.0658×10^{-5}
1.2	0.11507	2.7	0.0034670	4.2	1.3346×10^{-5}
1.3	0.096800	2.8	0.0025551	4.3	8.5399×10^{-6}
1.4	0.080757	2.9	0.0018658	4.4	5.4125×10^{-6}

If $T = 9N_0$

$$P_{e,0} = Q\left(\sqrt{\frac{9N_0}{3N_0}}\right) = Q(\sqrt{3}) \cong Q(1.73)$$

$$\cong 0.04$$

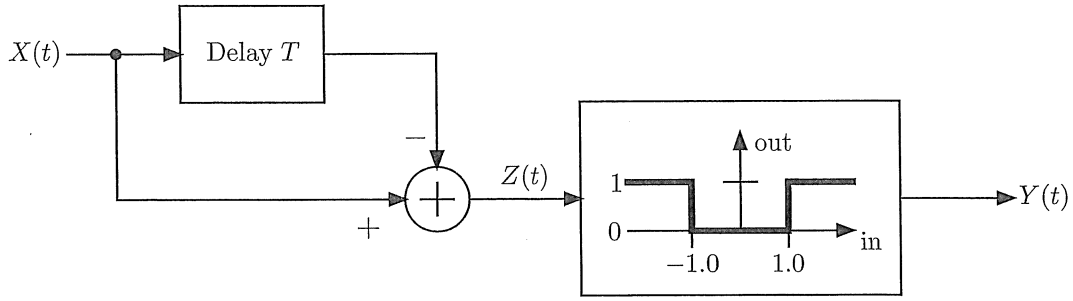

Problem 3. [35 pts. total] The input $X(t)$ to the system shown above is a zero mean, Gaussian random process, with triangularly shaped autocorrelation function:

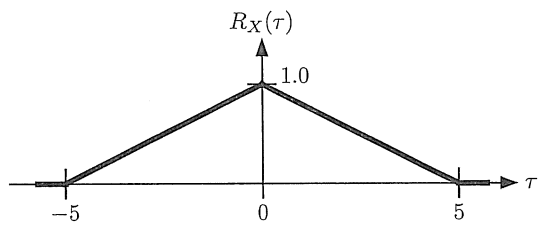

For $T = 2.5$ find the mean value $\mathrm{E}\{Y(t)\}$ of the random $0-1$ square wave at the output of the system. This mean value may be interpreted as the average duty cycle of the square wave $Y(t)$. Explain why. Finally, sketch a representative sample function for $Y(t)$.

$$Z(t) = X(t) - X(t-T)$$

Since $Z(t)$ is a linear combination of Gaussian random variables, it too is Gaussian and therefore $Z(t)$ is a Gaussian random process. Since

$$E\{Z(t)\} = E\{X(t)\} - E\{X(t-T)\} = 0 - 0$$

its mean is also zero.

Now

$$\begin{aligned}
\mathrm{Var}\{Z(t)\} &= E\{Z^2(t)\} \\
&= E\{(X(t) - X(t-T))^2\} \\
&= E\{X^2(t)\} + E\{X^2(t-T)\} - 2E\{X(t)X(t-T)\} \\
&= R_X(0) + R_X(0) - 2R_X(T) \\
&= 2[R_X(0) - R_X(T)]
\end{aligned}$$

Problem 3. (cont'd.)

Then for $T = 2.5$ have $R_X(2.5) = 0.5$. Similarly, $R_X(0) = 1$.

$$\Longrightarrow \operatorname{Var}\{Z(t)\} = 2(1 - 0.5) = 1$$

$\therefore$ For any time t $\quad Z(t) \sim N(0,1)$

Now
$$\begin{aligned}
E\{Y(t)\} &= P\{Y(t) = 1\} \\
&= P\{|Z(t)| > 1\} \\
&= 1 - P\{|Z(t)| \le 1\} \\
&= 1 - P\{-1 < Z(t) \le 1\} \qquad Z(t) \sim N(0,1) \\
&= 1 - [\Phi(1) - \Phi(-1)] \\
&= 1 - \Phi(1) + \Phi(-1) \\
&= 2\Phi(1) = 2 \cdot .15866
\end{aligned}$$

from Table.

$$\therefore E\{Y(t)\} = P\{Y(t) = 1\} \approx 0.32$$

Problem 3. (cont'd.)

The duty cycle interpretation works because $Y(t)$ is a binary wave.