Re: μ_{X_A}, $R_{X_A X_A}$, $\tilde{R}_{X_A X_A}$

$$X(t) \longrightarrow \boxed{2u(f)} \longrightarrow X_A(t)$$

Then $\mu_{X_A} = 2u(f)\Big|_{f=0} \cdot \mu_X$

Set $\mu_X = 0$ to not worry about value of unit step @ $f=0$.

Get $\mu_{X_A} = 0$ as needed.

$$S_{X_A X_A}(f) = |2u(f)|^2 S_{XX}(f)$$

$$= 4u(f) S_{XX}(f)$$

4.

$$\tilde{S}_{X_A X_A}(f) = 4\big(u(f)u(-f)\big)\tilde{S}_{XX}(f)$$

$$= 0$$

$\therefore$ $X_L(t)$ is WSS with

$\mu_{X_L} = 0$ $\quad \tilde{R}_{X_L X_L}(t, t+\tau) = 0$

$$R_{X_L X_L}(t, t+\tau) \longleftrightarrow S_{X_L X_L}(f) = S_{X_A X_A}(f+f_c)$$

$$= 4u(f+f_c) S_{XX}(f+f_c)$$

5.

Power

$$R_{X_L X_L}(0) = R_{X_A X_A}(0) = \int_0^\infty S_{X_A X_A}(f)\,df$$

$$= 4\int_0^\infty S_{XX}(f)\,df = 2\int_{-\infty}^\infty S_{XX}(f)\,df$$

$$= 2R_{XX}(0)$$

$$\text{Power}\{X_L\} = \text{Power}\{X_A\} = 2\cdot\text{Power}\{X\}$$

6.

$X \mapsto X_L \mapsto X$

On a sample path (i.e., deterministic) basis we had observed

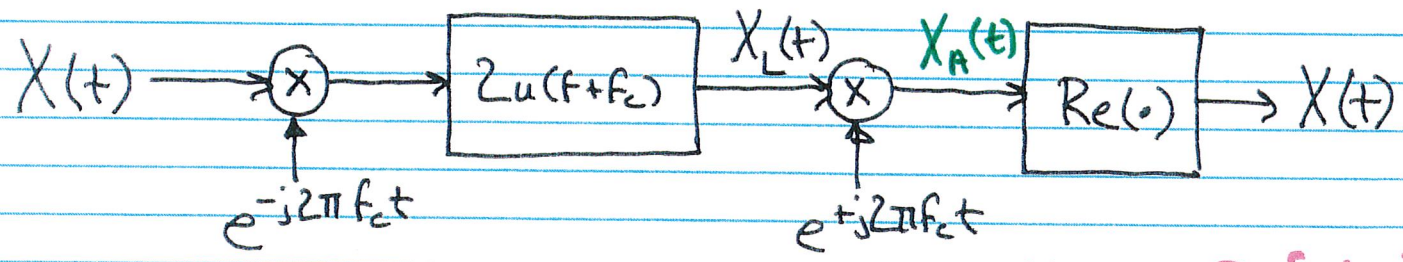

$$\therefore\ X(t) = \text{Re}\{X_L(t)\,e^{j2\pi f_c t}\}$$

$$= X_I(t)\cos(2\pi f_c t) - X_Q(t)\sin(2\pi f_c t)$$

$X_I(t) = \text{Re}\{X_L(t)\}$
$X_Q(t) = \text{Im}\{X_L(t)\}$

7.

Fact Following From $X_I(t) = \mathrm{Re}\, X_L(t)$, $X_Q(t) = \mathrm{Im}\, X_L(t)$

$$X_I(t) = \frac{X_L(t) + X_L^*(t)}{2} \qquad X_Q(t) = \frac{X_L(t) - X_L^*(t)}{j2}$$

$$\Longleftrightarrow \quad R_{X_I}(\tau) = R_{X_Q}(\tau) = \frac{1}{2}\mathrm{Re}\, R_{X_L}(\tau)$$

$$R_{X_I X_Q}(\tau) = -R_{X_I X_Q}(-\tau) = \frac{1}{2}\mathrm{Im}\, R_{X_L}(\tau)$$

$$\Longleftrightarrow \quad S_{X_I}(f) = S_{X_Q}(f) = \frac{S_{X_L}(f) + S_{X_L}(-f)}{4}$$

$$S_{X_I X_Q}(f) = -S^*_{X_I X_Q}(f) = \frac{S_{X_L}(f) - S_{X_L}(-f)}{j4}$$

8

$R_{X_I}(\tau)$

$$E\, X_I(t)\, X_I(t+\tau) = E\left(\frac{X_L(t) + X_L^*(t)}{2} \; \frac{X_L(t+\tau) + X_L^*(t+\tau)}{2}\right)$$

$$= \frac{1}{4}\Big\{ \underbrace{E X_L(t) X_L(t+\tau)}_{0} + E X_L(t) X_L^*(t+\tau) + E X_L^*(t) X_L(t+\tau) + \underbrace{E X_L^*(t) X_L^*(t+\tau)}_{0} \Big\}$$

$$= \frac{1}{4} R^*_{X_L}(\tau) + \frac{1}{4} R_{X_L}(\tau)$$

$$= \frac{1}{2}\mathrm{Re}\, R_{X_L}(\tau).$$

8a.

Consequences

* $R_{X_I X_Q}(0) = 0$

$X_I(t)$ and $X_Q(t)$ are uncorrelated when sampled at the same time instant

* If, in addition to previous assumptions, X is symmetric band pass in sense

$$u(f_c+f)\,S_X(f_c+f) = u(f_c-f)\,S_X(f_c-f)$$

then

$R_{X_L}(\tau)$ is real-valued

$R_{X_I X_Q}(\tau) = 0 \;\forall \tau$

$X_I(t)$ & $X_Q(s)$ uncorr. for any t, s.

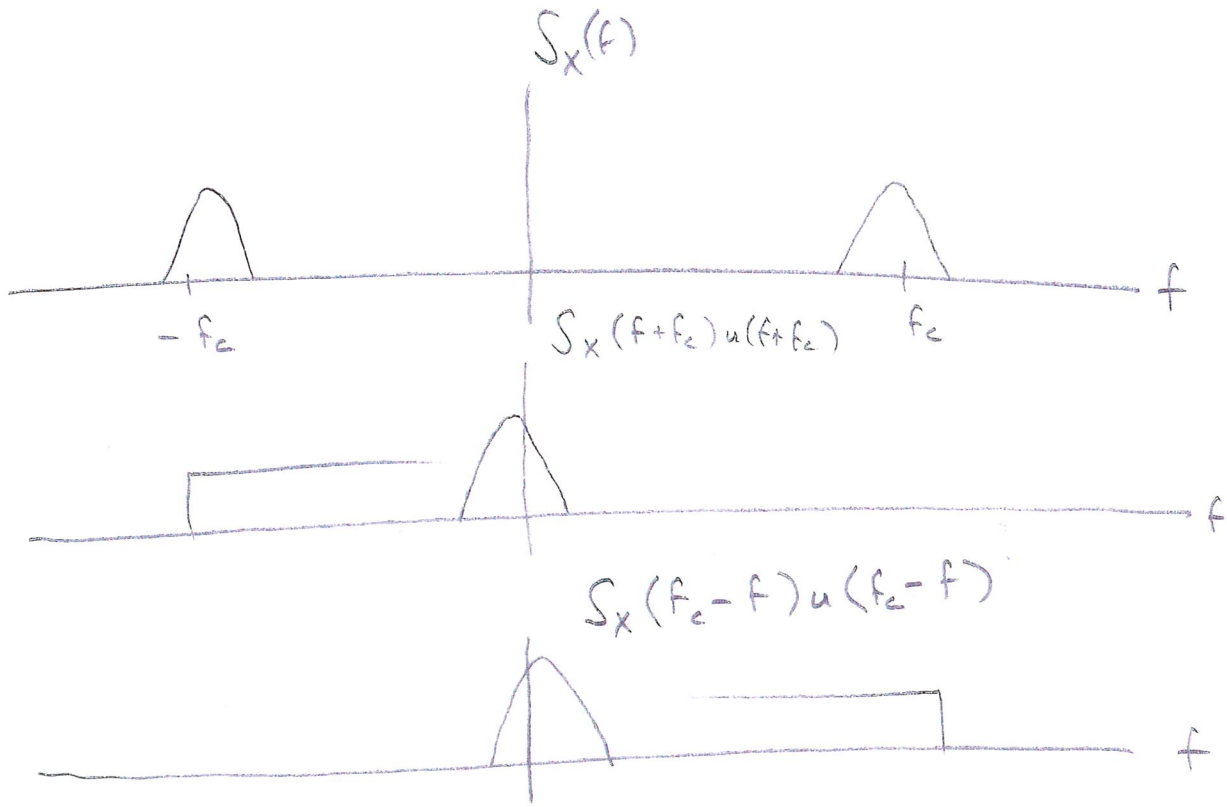

$$S_X(-f+f_c) = S_X(-(f-f_c)) = S_X(f-f_c)$$

ECE 440 — Complex Baseband Models for Passband Communications Systems

J. V. Krogmeier

March 7, 2022

Contents

1 Motivation **2**

2 Complex Envelope for Deterministic Energy Signals **2**

3 Complex Envelope and Linear Time Invariant Filtering **9**

4 Complex Envelope for Wide-Sense Stationary Random Signals **11**

5 Passband Communications **14**

5.1 Channel Models 14

5.2 Information Bearing Signals 17

5.3 Complex White Gaussian Noise 19

5.3.1 Complex Envelope of White Gaussian Noise 19

5.3.2 Complex Envelope of Bandpass-Filtered White Gaussian Noise 20

A Important Fourier Transform Properties **22**

B Notation and Properties of Second Order Processes **27**

B.1 Definitions 27

B.2 LTI Filtering 28

C Block Diagram Calculus to Identify the Complex Baseband Models **30**

141

1 Motivation

1. Certain types of demodulators (envelope detectors, discriminators) are based on the expression of a real-valued modulated signal in the form

$$x(t) = R(t)\cos[2\pi f_c t + \Psi(t)]$$

where $R(t) \geq 0$ is the envelope and $\Psi(t)$ is the phase. In particular, if $x(t)$ is input to:

   (a) an ideal envelope detector the output should be proportional to $R(t)$.

   (b) an ideal phase discriminator the output should be proportional to $\Psi(t)$.

   (c) an ideal frequency discriminator the output should be proportional to $\dot{\Psi}(t)$.

2 Complex Envelope for Deterministic Energy Signals

2. Frequency domain definition of complex envelope. Let $x(t)$ be a real-valued deterministic signal and let $x(t) \leftrightarrow X(f)$ denote a Fourier Transform pair[1]. Since the time-domain signal is real-valued, the Fourier Transform has conjugate symmetry about $f = 0$: $X(f) = X^*(-f)$. Define the *complex envelope* with respect to a carrier waveform[2] $\cos(2\pi f_c t)$ of some fixed center frequency $f_c > 0$ by [1]

$$\begin{aligned} X_L(f - f_c) &= 2u(f)X(f) \\ &\Updownarrow \\ X_L(f) &= 2u(f + f_c)X(f + f_c). \end{aligned}$$

   (a) In the above definition $u(\cdot)$ denotes the usual unit step function.

   (b) The time domain complex envelope is defined as the inverse Fourier Transform: $x_L(t) \leftrightarrow X_L(f)$.

3. Examples. The complex envelope is usually defined for passband signals as shown below by the situation on the left, but it may also be defined for the general case, as shown on the right. The passband case is the practical case. The general case is considered only for theoretical completeness.

[1] Recall

$$\int X(f)e^{j2\pi ft}\mathrm{d}f = x(t) \longleftrightarrow X(f) = \int x(t)e^{-j2\pi ft}\mathrm{d}t.$$

[2] We can also define the complex envelope with respect to a carrier $\cos(2\pi f_c t + \theta)$, i.e., having a phase offset, with a small modification. We will indicate the needed changes later.

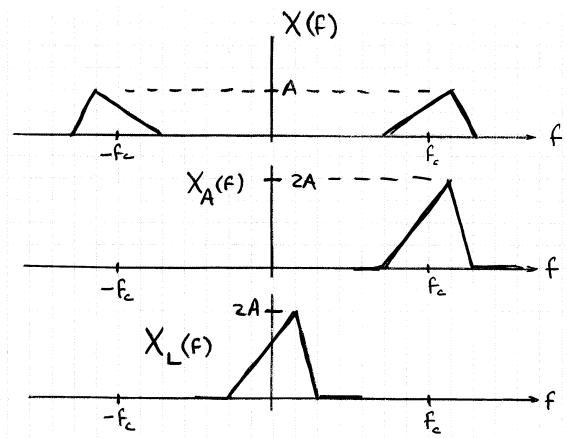

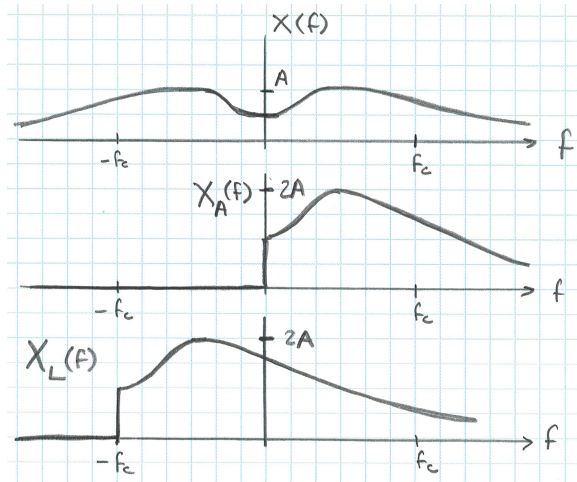

4. The definition suggests two equivalent block diagrams which generate the complex envelope as output when the real-valued signal is input.

   (a) **Block Diagram 1:** (filtering followed by down-conversion)

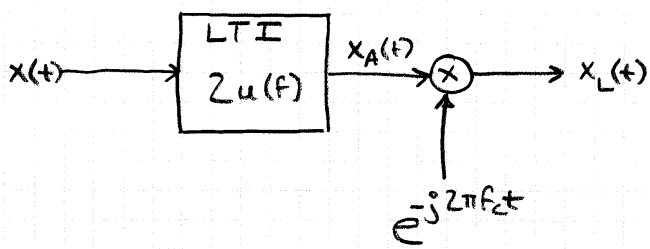

   The filter $2u(f)$ can be replaced by a complex bandpass filter if $x(t)$ is bandpass as illustrated in the figure below.

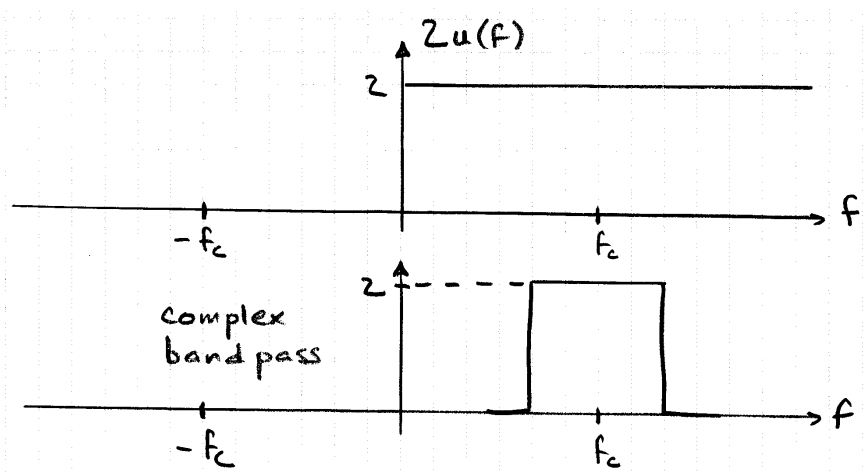

   (b) **Block Diagram 2:** (down-conversion followed by filtering)

143

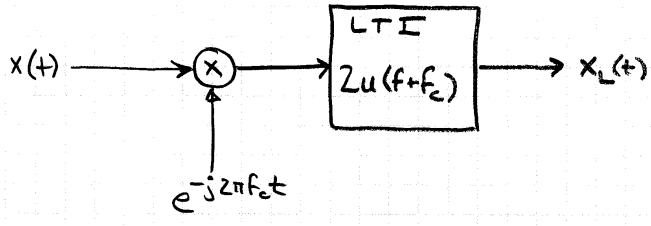

The filter $2u(f+f_c)$ can be replaced by a real lowpass filter if $x(t)$ is bandpass as illustrated in the figure below.

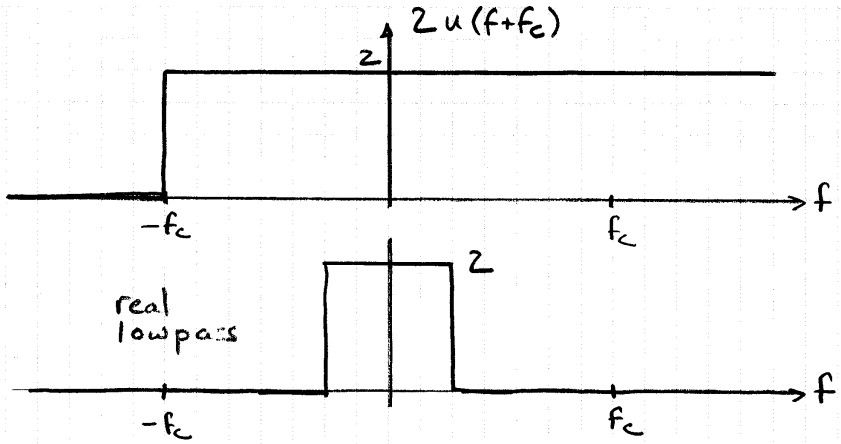

5. <u>Time domain definition of the complex envelope.</u> The impulse response of the filter $2u(f)$ is

$$\delta(t) + j\frac{1}{\pi t}.$$

This can be related to the notion of the *Hilbert transform*. The Hilbert transform $\hat{x}(t)$ of a real-valued signal $x(t)$ is the output of a LTI system driven by $x(t)$. The impulse response and transfer function of the Hilbert transformer are:

$$\frac{1}{\pi t} \leftrightarrow -j\text{sgn}(f).$$

6. Therefore, the time domain complex envelope can also be given as

$$x_L(t) = [x(t) + j\hat{x}(t)]\, e^{-j2\pi f_c t}$$

where the real-valued signal $\hat{x}(t)$ is the Hilbert transform of $x(t)$ and $x_A(t) \stackrel{\text{def}}{=} (x(t) + j\hat{x}(t))$ is called the *analytic signal*. Signals having frequency content containing only positive frequencies are said to be analytic signals.

7. A time-domain block diagram generating the analytic signal from a real-valued signal input is ...

144

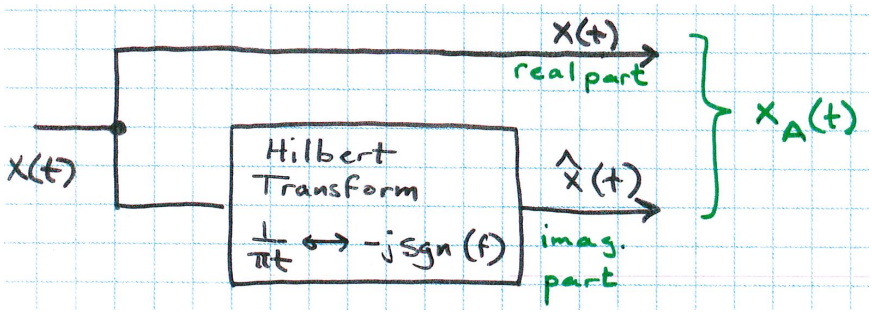

The above can be extended to generate the complex envelope signal ...

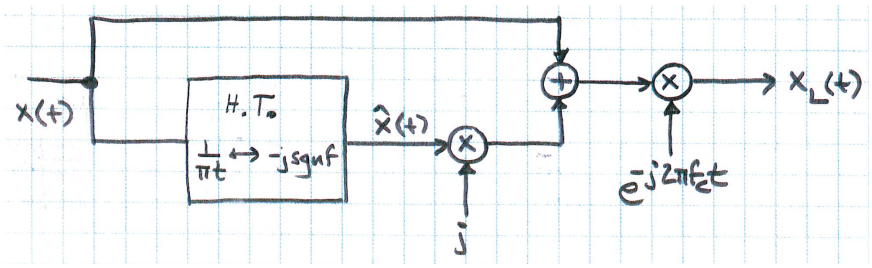

8. The previous used complex arithmetic. The equivalent real-arithmetic block diagram is ...

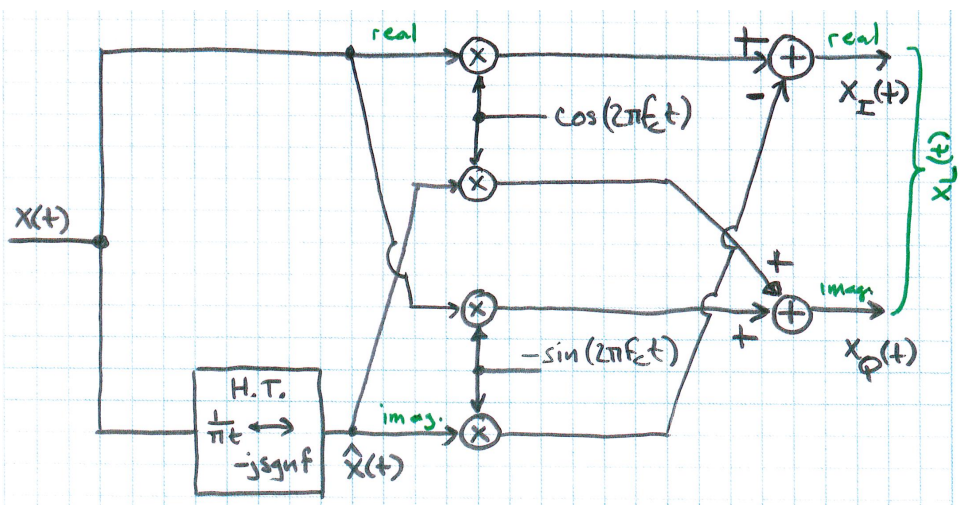

9. The *in-phase and quadrature components* of a real-valued signal $x(t)$ with respect to $\cos(2\pi f_c t)$ are defined to be the real and imaginary parts, respectively, of the time-domain complex envelope, i.e., $x_L(t) = x_I(t) + jx_Q(t)$.

10. We can derive a time-domain relationship between the complex envelope and the real-

valued signal using ...

$$\begin{aligned} X(f) &= \frac{1}{2}\left\{X_L(f-f_c) + X_L^*(-f-f_c)\right\} \\ &\updownarrow \\ x(t) &= \mathrm{Re}\left\{x_L(t)e^{j2\pi f_c t}\right\} \\ &= |x_L(t)|\cos(2\pi f_c t + \angle x_L(t)) \\ &= x_I(t)\cos(2\pi f_c t) - x_Q(t)\sin(2\pi f_c t). \end{aligned}$$

This relationship is a consequence of the steps below ...

(a) For the relationship among Fourier transforms define

$$\begin{aligned} X_+(f) &= u(f)X(f) \\ X_-(f) &= u(-f)X(f) \end{aligned}$$

(b) Then clear that $X_+(f) = \frac{1}{2}X_L(f-f_c)$ and $X(f) = X_+(f) + X_-(f)$.

(c) Since $x(t)$ is real-valued its Fourier Transform has conjugate symmetry and therefore $X_-(f) = X_+^*(-f)$ ...

$$\begin{aligned} X(f) &= X_+(f) + X_+^*(-f) \\ &= \frac{1}{2}X_L(f-f_c) + \frac{1}{2}X_L^*(-f-f_c). \end{aligned}$$

(d) The remainder of the claim follows from basic shift and conjugation properties[3] of the Fourier transform [2]. Thus, note that

$$x_L(t)e^{j2\pi f_c t} \leftrightarrow X_L(f-f_c) \quad \text{and} \quad (x_L(t)e^{j2\pi f_c t})^* \leftrightarrow X_L^*(-f-f_c)$$

and add terms up, properly scaled.

11. For a real-valued bandpass signal $x(t)$ and its complex envelope $x_L(t)$ the mapping: $x \mapsto x_L$ is implemented by a quadrature down-converter, and the mapping $x_L \mapsto x$ is implemented by a quadrature modulator. This can be seen by converting the complex filtering form of

$$x \mapsto x_L \mapsto x$$

[3] Namely

$$\begin{aligned} g(t) \longleftrightarrow G(f) \quad &\Leftrightarrow \quad g^*(t) \longleftrightarrow G^*(-f) \\ &\Leftrightarrow \quad g(t)e^{j2\pi f_c t} \longleftrightarrow G(f-f_c). \end{aligned}$$

146

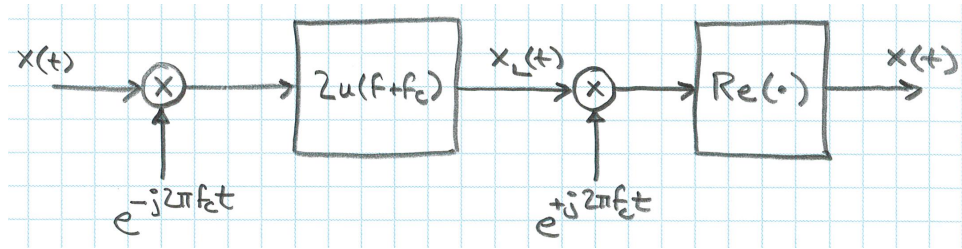

to the in-phase/quadrature form:

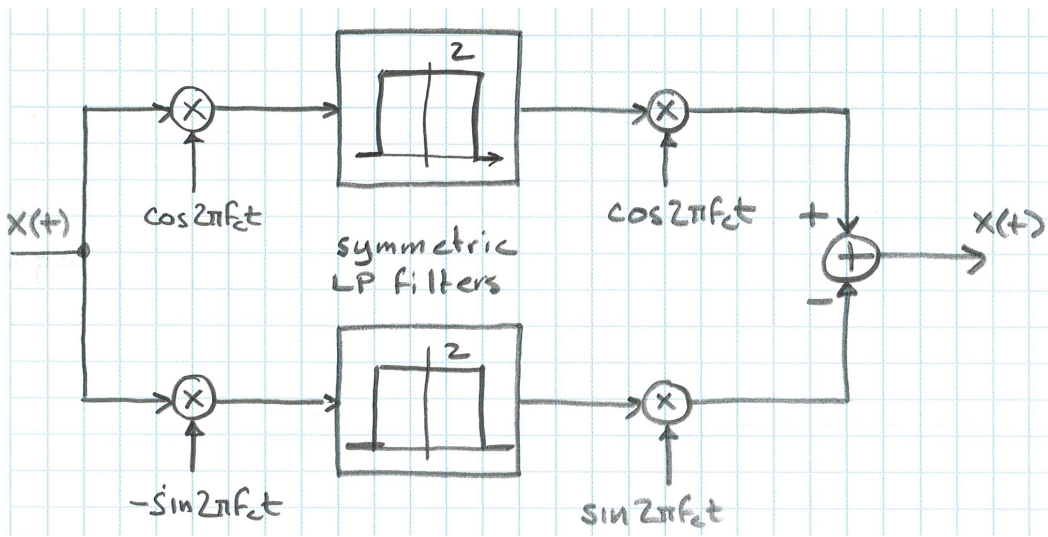

12. In fact, Item 11 leads to the following observation regarding inversion of the $x \mapsto x_L$ and $x_L \mapsto x$ operations ...

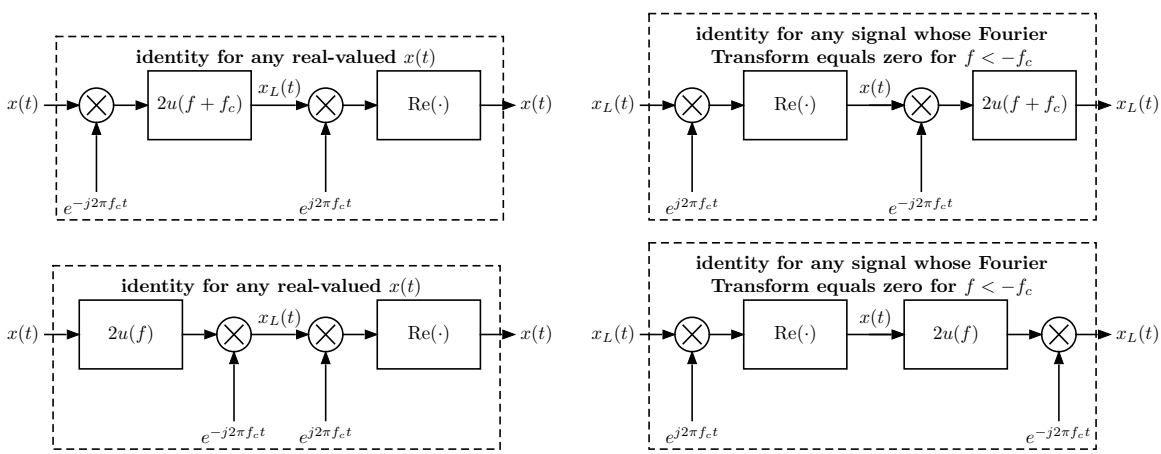

13. Let $x(t)$ be real-valued with complex envelope $x_L(t)$. Say $x_L(t) \leftrightarrow X_L(f)$, $x_I(t) = \mathrm{Re}\{x_L(t)\}$, $x_Q(t) = \mathrm{Im}\{x_L(t)\}$, $x_I(t) \leftrightarrow X_I(f)$, and $x_Q(t) \leftrightarrow X_Q(f)$. Then[4] [2]:

$$\begin{aligned} X_I(f) &= \left(X_L(f) + X_L^*(-f)\right)/2 \\ X_Q(f) &= \left(X_L(f) - X_L^*(-f)\right)/j2, \end{aligned}$$

[4]In general, $X_I(f) \neq \mathrm{Re}\{X_L(f)\}$ and $X_Q(f) \neq \mathrm{Im}\{X_L(f)\}$, in spite of the fact that $X_L(f) = X_I(f) + jX_Q(f)$. Of course, $X_I(f)$ and $X_Q(f)$ do not have to be real-valued.

147

which follows by taking the Fourier Transforms of $x_I(t) = (x_L(t)+x_L^*(t))/2$ and $x_Q(t) = (x_L(t) - x_L^*(t))/j2$.

14. In pictures, the above relationship is as below.

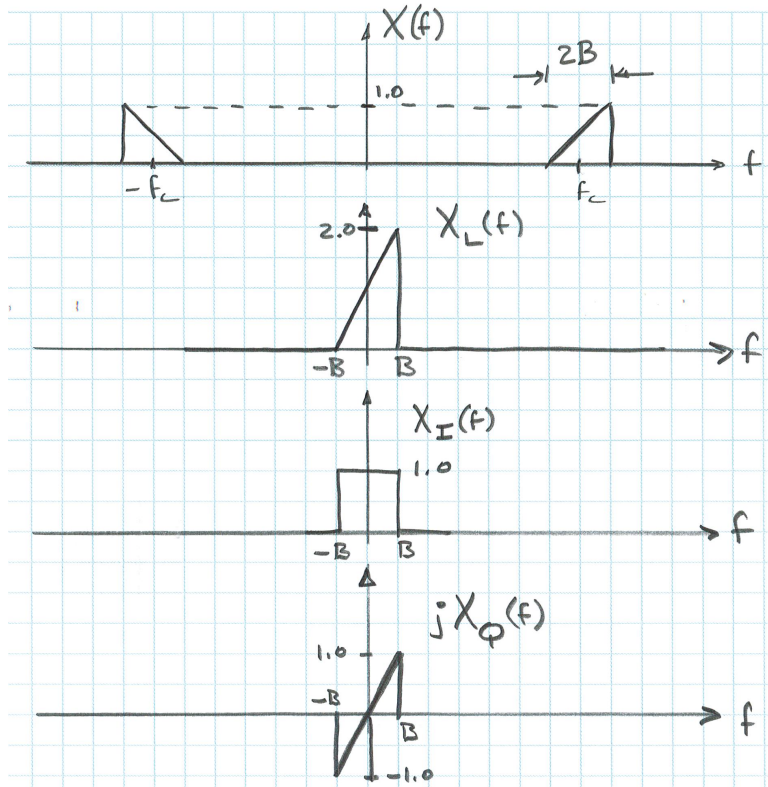

15. <u>Energy</u>

    (a) energy$[x_L(t)] = 2 \cdot$ energy$[x(t)]$.

    (b) energy$[x_L(t)] =$ energy$[x_I(t)] +$ energy$[x_Q(t)]$.

    (c) In general: energy$[x_I(t)] \neq$ energy$[x_Q(t)]$. In fact, possible that either $x_I(t)$ or $x_Q(t)$ equals zero.

16. <u>Uniqueness #1.</u> Say that $x(t)$ is real-valued and $x(t) = \text{Re}\{g(t)e^{j2\pi f_c t}\}$. Then

$$g(t) = x_L(t) \iff G(f) = 0 \text{ for } f < -f_c.$$

17. <u>Uniqueness #2.</u> We can define the complex envelope with respect to other carrier frequencies and then compare. We will need a notation to indicate the carrier frequency used to define the complex envelope. The definition of the complex envelope of a real-valued signal $x(t)$ with respect to $\cos(2\pi f_c t)$ is defined from the analytic signal $x_A(t)$ via

$$x_{L|f_c}(t) = x_A(t)e^{-j2\pi f_c t}.$$

148

(a) Then easy to show:

$$\begin{aligned} x_{L|f_c}(t) &= x_{L|f'_c}(t)e^{j2\pi(f'_c-f_c)t} \\ |x_{L|f_c}(t)| &= |x_{L|f'_c}(t)| \\ \angle x_{L|f_c}(t) &= \angle x_{L|f'_c}(t) + 2\pi(f'_c - f_c)t \end{aligned}$$

(b) This means that:

i. Output $R(t)$ of an envelope detector does not depend on the f_c in the definition of complex envelope (this makes sense).

ii. Outputs of frequency discriminators designed for different values of f_c would differ by a dc term proportional to $2\pi(f'_c - f_c)$.

18. Amplitude scale factor in C.E. definition. The scale factor 2 was used as the gain in the definition of the complex envelope. We can easily change that and still retain the spectral characteristics, etc. So suppose the filter $2u(f)$ is changed to $\alpha u(f)$. Then:

* $X_{A,new} \mapsto \frac{\alpha}{2}X_A$, $X_{L,new} \mapsto \frac{\alpha}{2}X_L$
* $x_{A,new} \mapsto \frac{\alpha}{2}x_A$, $x_{L,new} \mapsto \frac{\alpha}{2}x_L$
* The relative relationship between the C.E. and its in-phase and quadrature parts is unchanged
* $x(t) = \text{Re}\left\{x_L(t)e^{j2\pi f_c t}\right\} \mapsto x(t) = \text{Re}\left\{\frac{2}{\alpha}x_{L,new}(t)e^{j2\pi f_c t}\right\}$
* $\text{energy}[x_{L,new}(t)] = \frac{\alpha^2}{4}\text{energy}[x_L(t)]$
* $\text{energy}[x_{L,new}(t)] = \frac{\alpha^2}{2} \cdot \text{energy}[x(t)]$

A common choice of scale factor is $\alpha = \sqrt{2}$ for then the real signal and its complex envelope have equal energy. The basic relationship would then be written

$$x(t) = \text{Re}\left\{\sqrt{2}x_{L,new}(t)e^{j2\pi f_c t}\right\}$$

meaning, in effect, that the amplitude units of $x_{L,new}$ are RMS units in analogy to the usual treatment of power in sinusoidal steady state circuits.

3 Complex Envelope and Linear Time Invariant Filtering

19. Would like to relate the complex envelopes of the input and output of a LTI system. Suppose that

$$y(t) = [h * x](t) \longleftrightarrow Y(f) = H(f)X(f)$$

where the input signal x, the impulse response h, and the output y are real-valued.

149

20. From the definition

$$
\begin{aligned}
Y_L(f) &= 2u(f+f_c)Y(f+f_c) \\
&= \frac{1}{2}[2u(f+f_c)H(f+f_c)][2u(f+f_c)X(f+f_c)] \\
&\quad \text{(using } Y = HX \text{ and } u^2 = u\text{)} \\
&= \frac{1}{2}H_L(f)X_L(f) \longleftrightarrow y_L(t) = \frac{1}{2}[h_L * x_L](t).
\end{aligned}
$$

21. Thus the real filtering operation $y(t) = [h * x](t)$ can be implemented via the block diagram below. This amounts to the implementation of a bandpass filtering operation by downconversion followed by lowpass filtering and upconversion.

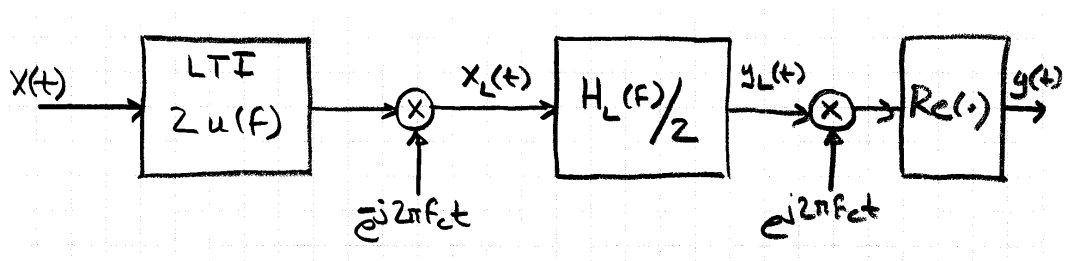

22. The previous can be redrawn[5] as shown ...

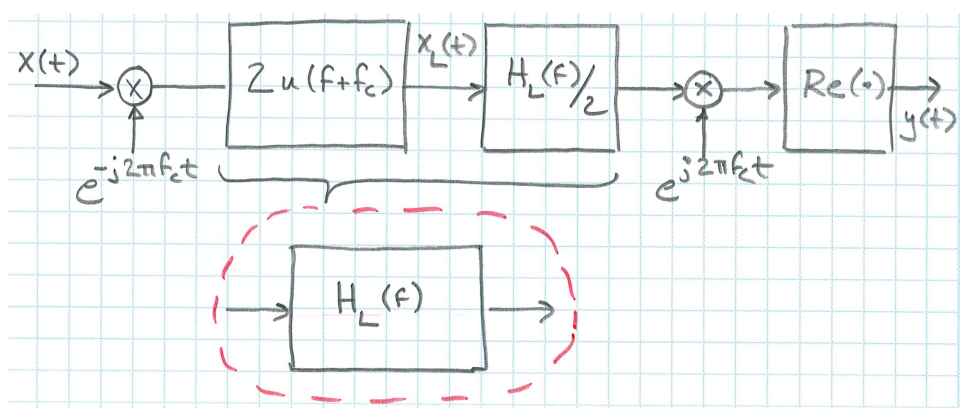

and then redrawn in I/Q form as ...

[5] By replacing Block Diagram 4a in the dashed box with Block Diagram 4b and using the fact that $u(f+f_c)H_L(f) = H_L(f)$.

150

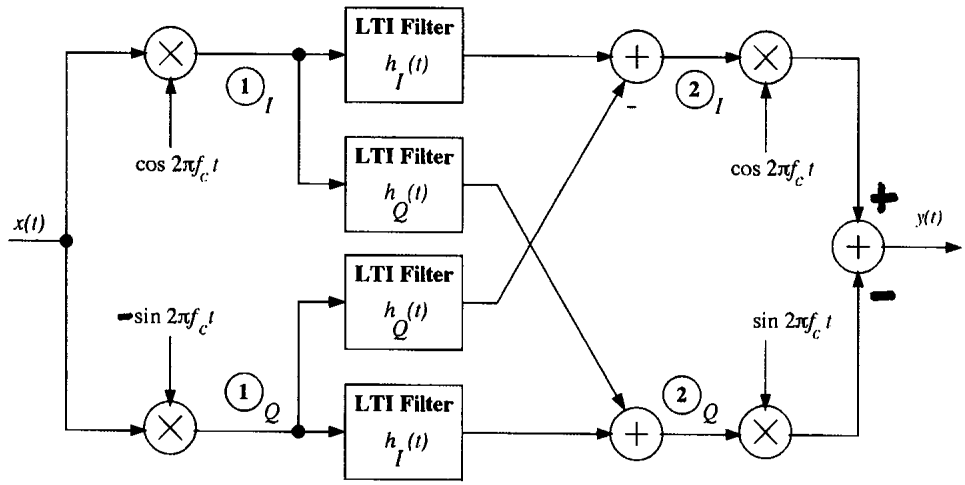

4 Complex Envelope for Wide-Sense Stationary Random Signals

23. Let $X(t)$ be a real-valued WSS random process. Define the complex envelope with respect to a carrier $\cos(2\pi f_c t)$ in the same way as was done for deterministic signals [1]. In otherwords, we let $X(t)$ be input to either Block Diagram 4a or Block Diagram 4b and define the complex envelope $X_L(t)$ to be the random process output.

    Up to now all of our random processes were real-valued and we will have to introduce some extra notation to handle the complex-valued case (see Appendix B).

    (a) When the spectral density $S_X(f)$ is non-zero only for frequencies f in

    $$\{f : ||f| - f_c| < B\}$$

    ($f_c > B$) then the filter in Block Diagram 4a may be replaced by a complex bandpass filter and the filter in Block Diagram 4b may be replaced by a real lowpass filter as was indicated there.

    (b) Since X_A is the output of a LTI system driven by WSS X it must also be WSS.

    (c) But $X_L(t) = X_A(t)e^{-j2\pi f_c t}$ which is not immediately seen to be WSS because it is the product of a time function and a WSS random process. We do have

    $$\begin{aligned} m_{X_L}(t) &= m_{X_A}(t)e^{-j2\pi f_c t} \\ R_{X_L}(t, t+u) &= R_{X_A}(t, t+u)e^{-j2\pi f_c u} \\ \tilde{R}_{X_L}(t, t+u) &= \tilde{R}_{X_A}(t, t+u)e^{-j2\pi(2f_c)t}e^{-j2\pi f_c u}. \end{aligned} \tag{1}$$

    Clearly, $\tilde{R}_{X_L}(t, t+u)$ will be a function of u alone if and only if it is equal to zero. Similarly for the mean.

151

24. If we look in the frequency domain and use standard LTI filtering formulas

$$\begin{aligned} m_{X_A} &= \left\{ 2u(f)|_{f=0} \right\} \cdot m_X \\ S_{X_A}(f) &= |2u(f)|^2 S_X(f) \;=\; 4u(f)S_X(f) \\ \tilde{S}_{X_A}(f) &= 4u(f)u(-f)S_X(f) \;=\; 0. \end{aligned}$$

Therefore, $\tilde{R}_{X_A}(t, t+u) = 0$ for all t, u, which implies the same for $\tilde{R}_{X_L}(t, t+u)$. Finally, if $X(t)$ is zero mean then so are X_A and X_L. We conclude that the complex envelope X_L is WSS under the assumption of zero mean[6]. At this point we will use WSS notation for the correlation functions and write them as functions of only the lag variable.

(a) In this case, we would write[7]

$$\begin{aligned} R_{X_L}(u) &= R_{X_A}(u)e^{-j2\pi f_c u} \\ &\updownarrow \\ S_{X_L}(f) &= S_{X_A}(f+f_c) \\ &= 4u(f+f_c)S_X(f+f_c). \end{aligned}$$

(b) From integrating psds we have

$$\mathrm{E}\{X^2(t)\} = 0.5\mathrm{E}\{|X_A(t)|^2\} = 0.5\mathrm{E}\{|X_L(t)|^2\},$$

i.e., the power in the complex envelope is twice the power in the original real-valued signal.

25. The in-phase and quadrature components of the complex envelope are defined ...

$$X_I(t) = \mathrm{Re}X_L(t) = \frac{X_L(t) + X_L^*(t)}{2} \tag{2}$$

$$X_Q(t) = \mathrm{Im}X_L(t) = \frac{X_L(t) - X_L^*(t)}{j2}. \tag{3}$$

26. Then $X_L(t) = X_I(t) + jX_Q(t)$, which, when substituted in $X(t) = \mathrm{Re}\{X_L(t)e^{j2\pi f_c t}\}$ yields the familiar expansion ...

$$X(t) = X_I(t)\cos(2\pi f_c t) - X_Q(t)\sin(2\pi f_c t).$$

27. It will follow that X_I and X_Q are zero-mean, WSS, real-valued random processes. We can compute the correlations R_{X_I}, R_{X_Q}, and $R_{X_I X_Q}$ using the expressions in Eqs. (2) and (3) and the definitions of the correlations. In fact,

$$R_{X_I}(u) = R_{X_Q}(u) = 0.5 \cdot \mathrm{Re}\{R_{X_L}(u)\}.$$

[6]Note: if the mean of the real-valued process $X(t)$ is zero then both complex processes $X_A(t)$ and $X_L(t)$ have complementary covariances $\tilde{C}_{X_A}(t,s) = \tilde{C}_{X_L}(t,s) = 0$ for all t, s. Complex processes with this property were called *proper* complex processes in [3].

[7]By the way $S_{X_L}(f) = 2 \cdot 2u(f+f_c)S_X(f+f_c)$ shows that $R_{X_L}(u)$ is 2 times the complex envelope of $R_X(u)$, considered as a deterministic real-valued signal.

152

For the cross-correlation we would start with

$$\left(\frac{X_L(t)+X_L^*(t)}{2}\right)\left(\frac{X_L(t+u)-X_L^*(t+u)}{j2}\right)$$

expand, take the expectation, and simplify. The resulting expression is ...

$$R_{X_I X_Q}(u) = 0.5 \cdot \mathrm{Im}\{R_{X_L}(u)\}.$$

28. Summarizing:

$$R_{X_L}(u) = 2R_{X_I}(u) + j2R_{X_I X_Q}(u).$$

Thus, the auto-correlation of X_L will be complex-valued in the general case.

29. However, the cross-correlation is purely odd, i.e.,

$$R_{X_I X_Q}(u) = -R_{X_I X_Q}(-u)$$

$\forall u \in \mathcal{R}$. As a consequence $R_{X_I X_Q}(0) = 0$, which is $\Leftrightarrow$ $X_I(t)$ and $X_Q(t)$ are uncorrelated when sampled at the same time instant.

30. Define Fourier Transforms associated with the correlation functions above

$$\begin{array}{ccc} R_{X_I}(u) & \leftrightarrow & S_{X_I}(f) \\ \shortparallel & & \shortparallel \\ R_{X_Q}(u) & \leftrightarrow & S_{X_Q}(f) \end{array}$$

and

$$R_{X_I X_Q}(u) \leftrightarrow S_{X_I X_Q}(f).$$

(a) We can easily show that $R_{X_I} = R_{X_Q}$ are real and even. Since they are auto-correlation functions, they are positive semi-definite[8]. Equivalently, $S_{X_I} = S_{X_Q}$ are real, positive, and even.

(b) In a similar way we can show that $R_{X_I X_Q}$ is real and odd, which is equivalent to $S_{X_I X_Q}$ being purely imaginary and odd.

(c) Therefore:

$$\begin{array}{rcccl} 0.5 \cdot \mathrm{Re}\{R_{X_L}(u)\} & = & R_{X_I}(u) & = & R_{X_Q}(u) \\ & \updownarrow & & & \\ \dfrac{S_{X_L}(f)+S_{X_L}(-f)}{4} & = & S_{X_I}(f) & = & S_{X_Q}(f). \end{array}$$

(d) For the cross-correlation:

$$\begin{array}{rcccl} 0.5 \cdot \mathrm{Im}\{R_{X_L}(u)\} & = & R_{X_I X_Q}(u) & = & -R_{X_I X_Q}(-u) \\ & \updownarrow & & & \\ \dfrac{S_{X_L}(f)-S_{X_L}(-f)}{j4} & = & S_{X_I X_Q}(f) & = & -S^*_{X_I X_Q}(f). \end{array}$$

[8]For our purposes, a positive semi-definite function of a time variable is one whose Fourier Transform is real-valued and positive (or zero) for all frequencies.

153

(e) A statement equivalent to the above is ...

$$\begin{aligned}
\text{Even}\{S_{X_L}(f)\} &= \frac{S_{X_L}(f) + S_{X_L}(-f)}{2} &= 2S_{X_I}(f) \\
\text{Odd}\{S_{X_L}(f)\} &= \frac{S_{X_L}(f) - S_{X_L}(-f)}{2} &= j2S_{X_I X_Q}(f).
\end{aligned}$$

(f) In terms of the original spectrum:

$$\begin{aligned}
S_{X_I}(f) &= u(f+f_c)S_X(f+f_c) + u(-f+f_c)S_X(-f+f_c) \\
S_{X_I X_Q}(f) &= j\left[u(-f+f_c)S_X(-f+f_c) - u(f+f_c)S_X(f+f_c)\right]
\end{aligned}$$

31. The representation $X(t) = \text{Re}\{X_L(t)e^{j2\pi f_c t}\} = X_I(t)\cos(2\pi f_c t) - X_Q(t)\sin(2\pi f_c t)$ has an analog for the correlation functions.

(a) Upon inserting the expression above into the definition for $R_X(u)$ and using the properties $R_{X_I}(u) = R_{X_Q}(u)$ and $R_{X_I X_Q}(u) = -R_{X_Q X_I}(u)$ we get:

$$R_X(u) = R_{X_I}(u)\cos(2\pi f_c u) - R_{X_I X_Q}(u)\sin(2\pi f_c u).$$

(b) Also have

$$R_X(u) = \text{Re}\{(R_{X_I}(u) + jR_{X_I X_Q}(u))\exp(j2\pi f_c u)\} = \text{Re}\{0.5 \cdot R_{X_L}(u)\exp(j2\pi f_c u)\}.$$

Therefore $0.5 \cdot R_{X_L}(u)$ is the complex envelope of $R_X(u)$ w.r.t. $\cos(2\pi f_c u)$.

32. <u>Important Special Case: X is WSS of zero mean and symmetric bandpass.</u>

(a) Suppose, in addition to the standing hypotheses, that X is symmetric bandpass in the sense that

$$u(f_c + f)S_X(f_c + f) = u(f_c - f)S_X(f_c - f).$$

(b) Then:

- $S_{X_L}(f)$ is even whence $R_{X_L}(u)$ is real-valued.
- $S_{X_I}(f) = S_{X_Q}(f) = S_{X_L}(f)/2 = u(f+f_c)S_X(f+f_c)$.
- $S_{X_I X_Q}(f) = 0$ and consequently $R_{X_I X_Q}(u) = 0$. That is, $X_I(t)$ and $X_Q(t+u)$ are uncorrelated for any value of u.

5 Passband Communications

5.1 Channel Models

33. The vast majority of communication systems are *passband systems.* This means that the transmitted information bearing signal $s(t)$ has its energy restricted to a band of frequencies located around some nominal carrier frequency and above and relatively far away from dc (baseband).

154

34. A simple channel model is as shown below:

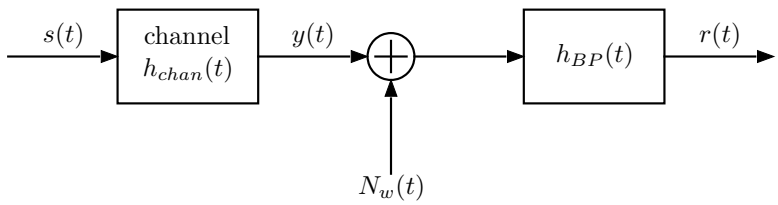

35. Here:

    (a) The information bearing signal is $s(t)$ and the received signal is $r(t)$, the signal that the receiver must use to estimate the desired message information. Typically, $s(t)$ has energy restricted to a known frequency band.

    (b) The receiver channel filter is represented by $h_{BP}(t) \leftrightarrow H_{BP}(f)$ which is assumed to have a bandpass characteristic just sufficient to pass $s(t)$ without distortion.

    (c) The communication channel itself is represented by some filtering $h_{chan}(t) \leftrightarrow H_{chan}(f)$ and the addition of a white Gaussian noise denoted by $N_w(t)$.

    (d) The channel filter is here indicated as LTI but it could be generalized. Note that if it is LTI then it is no loss of generality to consider its passband to be fully contained in that of $h_{BP}(t) \leftrightarrow H_{BP}(f)$. In such cases the BP filter will have no effect on the signal part so it could be dropped from the signal path.

    (e) Hence, if we may assume $h_{chan} * h_{BP} = h_{chan}$, then the simple channel model above is equivalent to:

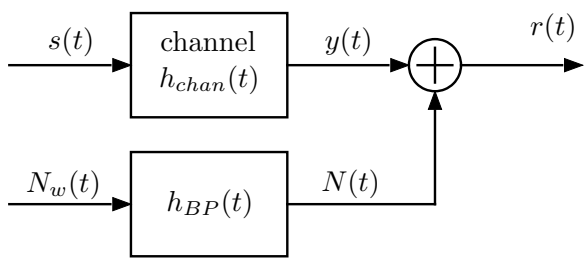

36. If we assume that the information bearing signal is created using a so-called quadrature amplitude modulator (QAM) and that a QAM demodulator is used to recover it, then the standard passband modulator-channel-demodulator is as shown in the figure below. All signals and impulse responses are real-valued.

37. Note that the model allows for the possibility of frequency and phase offsets between transmitter and receiver, i.e., it is possible that $f_c' \neq f_c$ and/or $\theta \neq 0$.

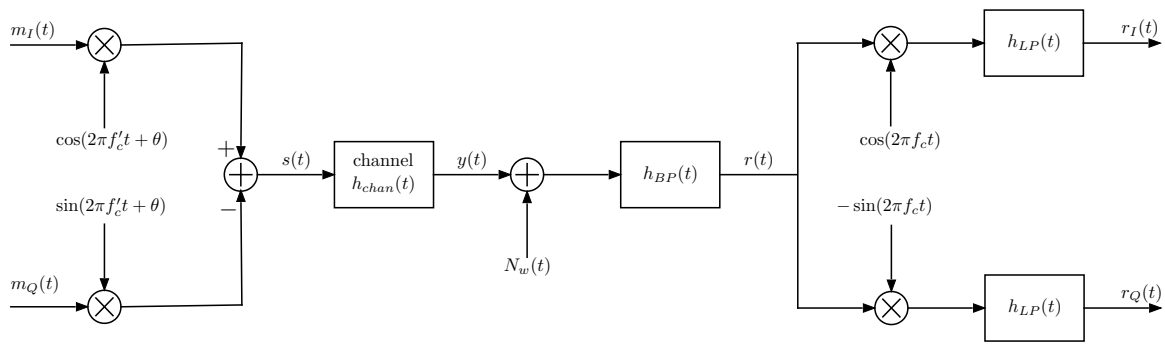

38. The above passband modulator-channel-demodulator can be drawn more compactly by using complex notation as shown in the figure below where $m_L(t) = m_I(t) + jm_Q(t)$ and $r_L(t) = r_I(t) + jr_Q(t)$. Note that the inputs and outputs of $h_{chan}(t)$ and $h_{BP}(t)$ are still real-valued although the input to $h_{LP}(t)$ is now complex. However, $h_{LP}(t)$ is a real-valued impulse response so it operates on the real and imaginary parts of its input without "crosstalk."

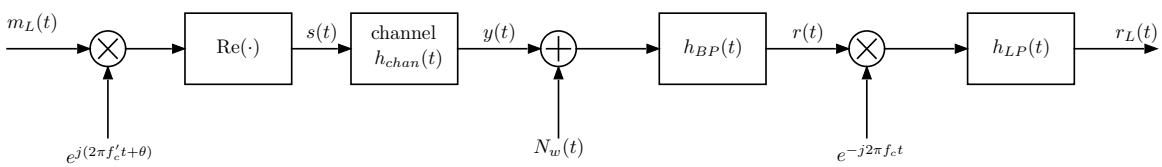

39. A complex baseband model for the passband system is a way to directly compute the output $r_L(t)$ from the input $m_L(t)$ using baseband operations, i.e., baseband LTI filtering and/or frequency conversions with small (relative to baseband) center frequencies. This has several benefits:

    (a) A baseband model is a simpler model.

    (b) A baseband model can be numerically simulated with much lower computation than can a passband model because the sampling rate is much lower.

    (c) A baseband model can form the basis for a discrete-time implementation of a bandpass communications system.

40. Assuming that $m_I(t)$ and $m_Q(t)$ are baseband waveforms with narrow bandwidths in comparision to either f_c' of f_c (which are close to equal) then

$$\begin{aligned} s(t) &= \mathrm{Re}\left\{(m_I(t) + jm_Q(t))e^{j\theta}e^{j2\pi f_c' t}\right\} \\ r(t) &= \mathrm{Re}\left\{(r_I(t) + jr_Q(t))e^{j2\pi f_c t}\right\} \end{aligned}$$

which means that $s_{L|f_c'}(t) = m_L(t)e^{j\theta}$ is the complex envelope of $s(t)$ with respect to the carrier $e^{j2\pi f_c' t}$ and $r_{L|f_c}(t)$ is the complex envelope of $r(t)$ with respect to the carrier $e^{j2\pi f_c t}$.

41. We can show that the equivalent complex baseband model can be written in two equivalent ways based on the assumptions above (see Appendix C) ...

156

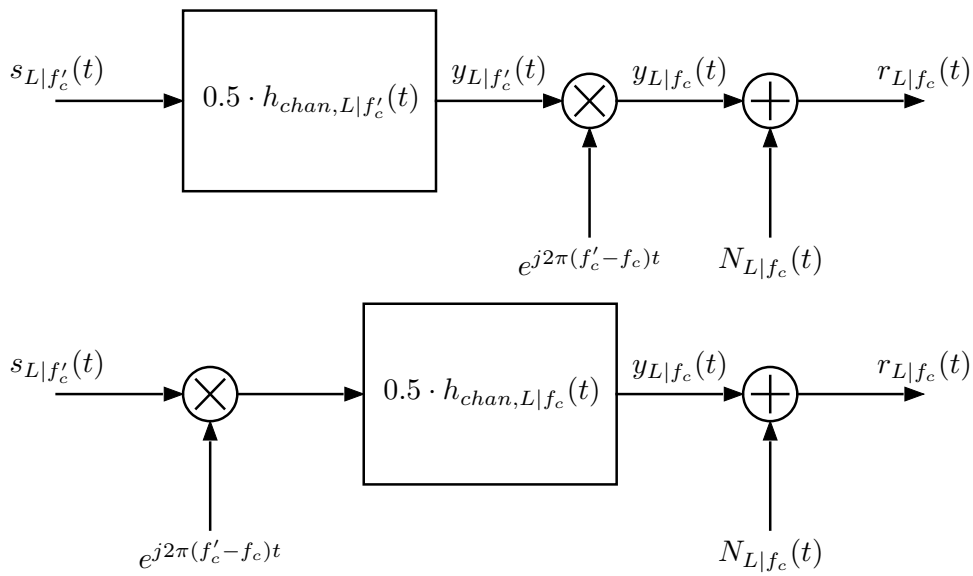

5.2 Information Bearing Signals

42. We have studied five modulations to this point. When put in the QAM modulator format, they can be summarized in the figure below ...

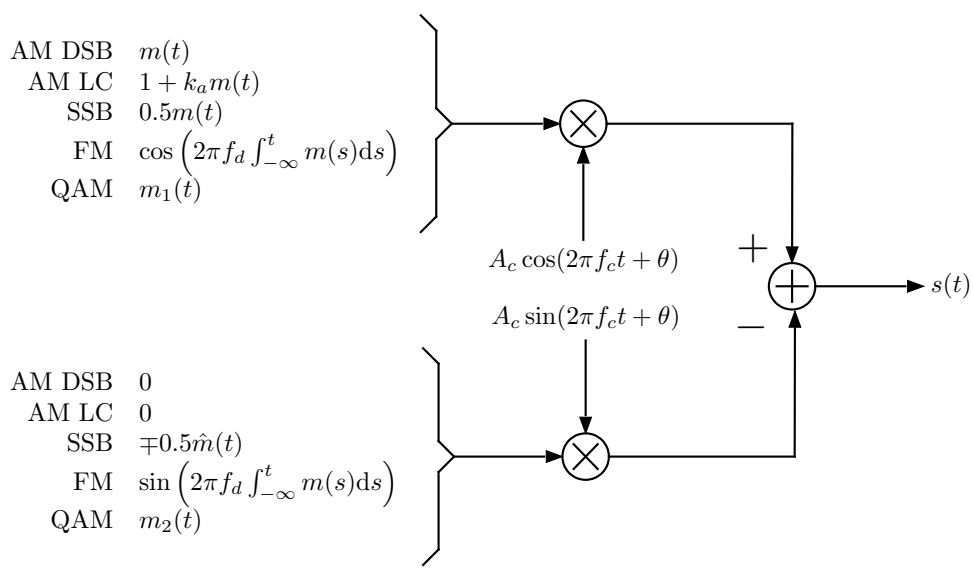

43. The message waveforms are $m(t)$, $m_1(t)$, and $m_2(t)$, which are modeled as real-valued WSS random processes statistically independent of each other. We assume correlation functions and power spectral densities

$$R_m(\tau) \leftrightarrow S_m(f)$$

$$R_{m_1}(\tau) \leftrightarrow S_{m_1}(f) \text{ and } R_{m_2}(\tau) \leftrightarrow S_{m_2}(f).$$

In order to have a WSS model for the transmitted bandpass signal $s(t)$ we include a

157

random phase Θ in the model, which is assumed uniform over the interval $[0, 2\pi)$ and statistically independent of all other random variables and processes.

44. Summary of the information bearing signals:

(a) <u>AM DSB.</u>

$$\begin{aligned}
s(t) &= A_c m(t)\cos(2\pi f_c t + \Theta) \\
s_L(t) &= A_c m(t) e^{j\Theta} \\
R_s(\tau) &= 0.5 A_c^2 R_m(\tau)\cos 2\pi f_c \tau \\
&\updownarrow \\
S_s(f) &= 0.25 A_c^2 \left[S_m(f-f_c) + S_m(f+f_c)\right] \\
R_{s_L}(\tau) &= A_c^2 R_m(\tau) \\
&\updownarrow \\
S_{s_L}(f) &= A_c^2 S_m(f)
\end{aligned}$$

(b) <u>AM LC.</u>

$$\begin{aligned}
s(t) &= A_c[1 + k_a m(t)]\cos(2\pi f_c t + \Theta) \\
s_L(t) &= A_c[1 + k_a m(t)] e^{j\Theta} \\
R_s(\tau) &= 0.5 A_c^2 [1 + k_a^2 R_m(\tau)]\cos 2\pi f_c \tau \\
&\updownarrow \\
S_s(f) &= 0.25 A_c^2 \left[\delta(f-f_c) + \delta(f+f_c)\right] \\
&\quad + 0.25 k_a^2 A_c^2 \left[S_m(f-f_c) + S_m(f+f_c)\right] \\
R_{s_L}(\tau) &= A_c^2 [1 + k_a^2 R_m(\tau)] \\
&\updownarrow \\
S_{s_L}(f) &= A_c^2 [\delta(f) + k_a^2 S_m(f)]
\end{aligned}$$

(c) <u>AM SSB.</u> (top choice of sign is SSB-lower, bottom choice of sign is SSB-upper)

$$\begin{aligned}
s(t) &= 0.5 A_c m(t)\cos(2\pi f_c t + \Theta) \pm 0.5 A_c \hat{m}(t)\sin(2\pi f_c t + \Theta) \\
s_L(t) &= 0.5 A_c [m(t) \mp j\hat{m}(t)] e^{j\Theta} \\
R_s(\tau) &= 0.25 A_c^2 [R_m(\tau)\cos 2\pi f_c \tau \pm \hat{R}_m(\tau)\sin 2\pi f_c \tau] \\
&\updownarrow \\
S_s(f) &= 0.125 A_c^2 \left[(1 \mp \mathrm{sgn}(f-f_c))S_m(f-f_c) + (1 \pm \mathrm{sgn}(f+f_c))S_m(f+f_c)\right] \\
R_{s_L}(\tau) &= 0.5 A_c^2 [R_m(\tau) \mp j\hat{R}_m(\tau)] \\
&\updownarrow \\
S_{s_L}(f) &= 0.5 A_c^2 S_m(f)[1 \mp \mathrm{sgn}(f)]
\end{aligned}$$

158

(d) <u>FM.</u> Let $\phi(t) = 2\pi f_d \int_{-\infty}^{t} m(s)\mathrm{d}s$. Then

$$\begin{aligned} s(t) &= A_c \cos\left(2\pi f_c t + \phi(t) + \Theta\right) \\ s_L(t) &= A_c e^{j\phi(t)} e^{j\Theta} \end{aligned}$$

The power in $s(t)$ is $0.5A_c^2$ and the transmission BW is $2(\Delta_f + W)$ even though we don't have formulas for correlations or spectra except in the case of sinusoidal modulations.

(e) <u>QAM.</u>

$$\begin{aligned} s(t) &= A_c m_1(t)\cos(2\pi f_c t + \Theta) + A_c m_2(t)\sin(2\pi f_c t + \Theta) \\ s_L(t) &= A_c[m_1(t) + jm_2(t)]e^{j\Theta} \\ R_s(\tau) &= 0.5A_c^2[R_{m_1}(\tau) + R_{m_2}(\tau)]\cos 2\pi f_c \tau \\ &\updownarrow \\ S_s(f) &= 0.25A_c^2\left[(S_{m_1}(f - f_c) + S_{m_1}(f + f_c) + S_{m_2}(f - f_c) + S_{m_2}(f + f_c)\right] \\ R_{s_L}(\tau) &= A_c^2[R_{m_1}(\tau) + R_{m_2}(\tau)] \\ &\updownarrow \\ S_{s_L}(f) &= A_c^2[S_{m_1}(f) + S_{m_2}(f)] \end{aligned}$$

5.3 Complex White Gaussian Noise

45. The complex baseband model shown in Item 41 uses $N_{L|f_c}(t)$ as its noise input. This is the complex envelope of the real-valued bandpass noise $N(t)$ from the real-valued bandpass model. On the other hand, the noise input to the final block diagram in Figure 9 is the complex envelope of a white noise.

5.3.1 Complex Envelope of White Gaussian Noise

46. However, the complex envelope of real-valued white noise is not white. This is demonstrated now.

(a) Let $W(t)$ be real-valued additive white Gaussian noise (AWGN). Thus $\mathrm{E}W(t) = 0$ and

$$R_W(\tau) = \frac{N_0}{2}\delta(\tau) \leftrightarrow S_W(f) = \frac{N_0}{2} \quad \forall f \in \mathcal{R}.$$

(b) Following the previous development we can easily show that $S_{W_L}(f) = 4u(f + f_c)N_0/2$ which is equal to

$$S_{W_L}(f) = \begin{cases} 2N_0 & \text{for } f > -f_c \\ 0 & \text{for } f < -f_c \end{cases}$$

which is not constant for all f and by definition, not white.

159

(c) Solving for the auto-correlation we find

$$R_{W_L}(\tau) = \left[N_0\delta(\tau) + \frac{N_0}{\pi\tau}\sin(2\pi f_c\tau)\right] + j\frac{N_0}{\pi\tau}\cos(2\pi f_c\tau).$$

(d) Following the standard development we can also find the correlations of the in-phase and quadrature components $W_I(t)$ and $W_Q(t)$ ...

$$\begin{aligned} R_{W_I}(\tau) &= R_{W_Q}(\tau) = \frac{N_0}{2}\delta(\tau) + \frac{N_0}{2}\frac{\sin(2\pi f_c\tau)}{\pi\tau} \\ R_{W_I W_Q}(\tau) &= \frac{N_0}{2}\frac{\cos(2\pi f_c\tau)}{\pi\tau} \end{aligned}$$

meaning the in-phase and quadrature components are also non-white and statistically dependent.

5.3.2 Complex Envelope of Bandpass-Filtered White Gaussian Noise

47. Instead of starting with white noise, use $N(t)$ the bandpass filtered noise with an ideal bandpass filter of gain one, centered at f_c, and symmetric about f_c, i.e., $N(t)$ has psd

$$S_N(f) = \begin{cases} N_0/2 & \text{for } ||f| - f_c| < B \\ 0 & \text{else} \end{cases}.$$

Here we presume the bandwidth B is much wider than the minimum needed. Receivers will likely use filters to further reduce the noise power.

48. By following the standard development we can compute N_L, N_I, N_Q and all correlations and spectra. We would have $S_{N_L}(f) = 4u(f + f_c)S_N(f + f_c)$, ...

$$S_{N_L}(f) = \begin{cases} 2N_0 & \text{for } |f| < B \\ 0 & \text{else} \end{cases}$$

which is symmetric about $f = 0$. Because of the symmetry it follows that $R_{N_I N_Q}(\tau) = 0$ for all τ. In addition, $S_{N_I}(f) = S_{N_Q}(f) = 0.5 \cdot S_{N_L}(f)$. From a table of Fourier Transforms

$$R_{N_I}(\tau) = R_{N_Q}(\tau) = 0.5 \cdot R_{N_L}(\tau) = 2N_0 B\frac{\sin(2\pi B\tau)}{2\pi B\tau}.$$

49. Then we could use this complex noise as the input to the block diagrams in Item 41.

50. However, this lowpass complex noise can be replaced by a complex white noise process found by taking the limit as $B \to \infty$ in the previous model and all calculations of probability or power would be the same. Since, this last model is so simple, it is preferred. This noise is defined by $W(t) = W_I(t) + jW_Q(t)$ where[9]

$$R_W(\tau) = 2N_0\delta(\tau) \quad \text{and} \quad \tilde{R}_W(\tau) = 0.$$

[9] Also have $R_{W_I}(\tau) = R_{W_Q}(\tau) = N_0\delta(\tau)$ and $R_{W_I W_Q}(\tau) = 0$.

160

This gives the final and simplest model ...

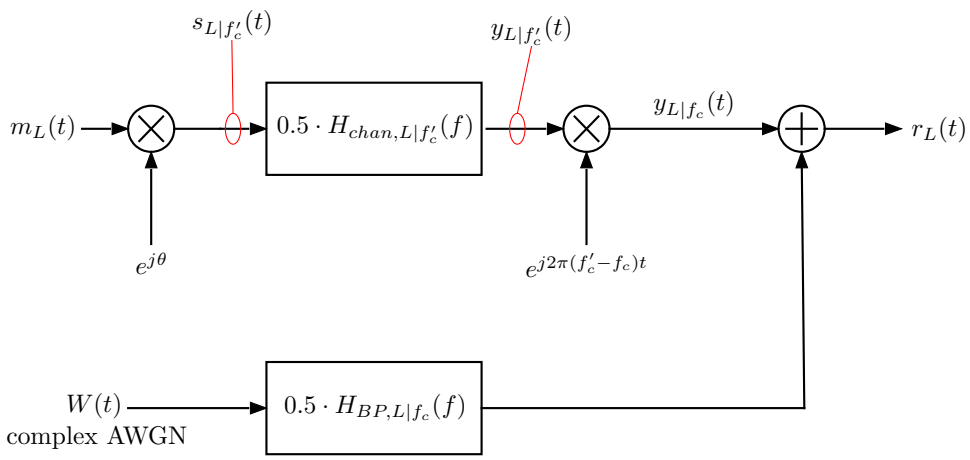

161

A Important Fourier Transform Properties

51. Symmetries associated with the continuous-time Fourier Transform are at the heart of the complex envelope representation. Therefore, we review and summarize these here. See Figures 2 and 3 to review more generally. Let $g(t) \leftrightarrow G(f)$ denote a generic FT pair, where either time-domain or frequency-domain signal can be complex-valued ...

$$\begin{aligned} g(t) &= \int_{-\infty}^{\infty} G(f) e^{j2\pi ft} \mathrm{d}f \\ &\updownarrow \\ G(f) &= \int_{-\infty}^{\infty} g(t) e^{-j2\pi ft} \mathrm{d}t. \end{aligned}$$

52. The properties of interest for signals in either domain are:

    - Purely real. Time domain: $g(t) = g^*(t)$ for all $t \in \mathcal{R}$. Frequency domain: $G(f) = G^*(f)$ for all $f \in \mathcal{R}$.
    - Purely imaginary. Time domain: $g(t) = -g^*(t)$ for all $t \in \mathcal{R}$. Frequency domain: $G(f) = -G^*(f)$ for all $f \in \mathcal{R}$.
    - Even (possibly complex). Time domain: $g(t) = g(-t)$ for all $t \in \mathcal{R}$. Frequency domain: $G(f) = G(-f)$ for all $f \in \mathcal{R}$.
    - Odd (possibly complex). Time domain: $g(t) = -g(-t)$ for all $t \in \mathcal{R}$. Frequency domain: $G(f) = -G(-f)$ for all $f \in \mathcal{R}$.
    - Even-conjugate symmetric about the origin. Time domain: $g(t) = g^*(-t)$ for all $t \in \mathcal{R}$. Frequency domain: $G(f) = G^*(-f)$ for all $f \in \mathcal{R}$.
    - Odd-conjugate symmetric about the origin. Time domain: $g(t) = -g^*(-t)$ for all $t \in \mathcal{R}$. Frequency domain: $G(f) = -G^*(-f)$ for all $f \in \mathcal{R}$.

53. Of interest is how a particular property in the time domain is manifest in the frequency domain, and vice-versa. Note also that these are not necessarily independent. For example, if a signal is purely real and even, then it must also be even-conjugate symmetric about the origin. The symmetry properties are summarized in Figure 1.

54. The proofs are simple and left to the reader. But a few related observations are given below. Note also that the duality evident in the definition of time and frequency domain Fourier Transforms ensures that the properties checked in Figure 1 have to appear in a symmetric fashion.

    (a) $x(t)$ is purely real $\Leftrightarrow X(f) = X^*(-f)$, $\forall f \in \mathcal{R}$. This is well known, of course. But it might be useful to recall that the even-conjugate symmetry of the Fourier Transform is equivalent to the following ...

$$\Leftrightarrow \left\{ \begin{array}{ccc} |X(f)| & = & |X(-f)| \\ \text{and} & & \\ \angle X(f) & = & -\angle X(-f) \end{array} \forall f \in \mathcal{R} \right\} \Leftrightarrow \left\{ \begin{array}{ccc} \mathrm{Re}X(f) & = & \mathrm{Re}X(-f) \\ \text{and} & & \\ \mathrm{Im}X(f) & = & -\mathrm{Im}X(-f) \end{array} \forall f \in \mathcal{R} \right\}$$

Freq. Domain Properties of:

$$X(f) = \int_{-\infty}^{\infty} x(t)e^{-j2\pi ft}\mathrm{d}t$$

Time Domain Properties of:

$$x(t) = \int_{-\infty}^{\infty} X(f)e^{j2\pi ft}\mathrm{d}f$$

	pure real	pure imag.	even	odd	$X(f) = X^*(-f)$	$X(f) = -X^*(-f)$	pure real, even, $X(f) = X^*(-f)$	pure imag., odd, $X(f) = X^*(-f)$	pure real, odd, $X(f) = -X^*(-f)$	pure imag., even, $X(f) = -X^*(-f)$
pure real					X					
pure imag.						X				
even			X							
odd				X						
$x(t) = x^*(-t)$	X									
$x(t) = -x^*(-t)$		X								
pure real, even, $x(t) = x^*(-t)$							X			
pure imag., odd, $x(t) = x^*(-t)$									X	
pure real, odd, $x(t) = -x^*(-t)$								X		
pure imag., even, $x(t) = -x^*(-t)$										X

Figure 1: Symmetry Properties of Fourier Transforms.

(b) $x(t)$ is purely imag. $\Leftrightarrow X(f) = -X^*(-f), \forall f \in \mathcal{R}$. Recall that the odd-conjugate symmetry of the Fourier Transform is equivalent to the following ...

$$\Leftrightarrow \left\{ \begin{array}{ccc} |X(f)| & = & |X(-f)| \\ \text{and} & & \\ \angle X(f) & = & \angle X(-f) \end{array} \forall f \in \mathcal{R} \right\} \Leftrightarrow \left\{ \begin{array}{ccc} \mathrm{Re}X(f) & = & -\mathrm{Re}X(-f) \\ \text{and} & & \\ \mathrm{Im}X(f) & = & \mathrm{Im}X(-f) \end{array} \forall f \in \mathcal{R} \right\}$$

Table XIII.2—Properties of Fourier Transforms

	$x(t) = \int_{-\infty}^{\infty} X(f) e^{j2\pi ft}\, df$	$X(f) = \int_{-\infty}^{\infty} x(t) e^{-j2\pi ft}\, dt$
Conjugate Symmetry	$\Im m[x(t)] = 0$ (i.e., $x(t)$ is real)	$X(f) = X^*(-f)$ (i.e., $\Re e[X(f)] = \Re e[X(-f)]$, $\Im m[X(f)] = -\Im m[X(-f)]$)
Even Symmetry	$x(t) = x(-t)$	$X(f) = X(-f)$
Odd Symmetry	$x(t) = -x(-t)$	$X(f) = -X(-f)$
Linearity	$ax_1(t) + bx_2(t)$	$aX_1(f) + bX_2(f)$
Duality	$X(t)$	$x(-f)$
Scale Change	$x(at)$	$\frac{1}{\lvert a\rvert} X(f/a)$
Time Delay	$x(t - t_0)$	$e^{-j2\pi f t_0} X(f)$
Times $e^{j2\pi f_0 t}$	$e^{j2\pi f_0 t} x(t)$	$X(f - f_0)$
Differentiation	$\frac{dx(t)}{dt}$	$j2\pi f X(f)$
Times t	$tx(t)$	$\frac{1}{-j2\pi} \frac{dX(f)}{df}$
Convolution	$\int_{-\infty}^{\infty} w(\tau) v(t-\tau)\, d\tau$	$W(f)V(f)$
Product	$w(t)v(t)$	$\int_{-\infty}^{\infty} W(\nu) V(f-\nu)\, d\nu$
Integration	$\int_{-\infty}^{t} x(\tau)\, d\tau$	$\frac{X(f)}{j2\pi f} + \frac{X(0)\delta(f)}{2}$

Other formulas:

$$X(0) = \int_{-\infty}^{\infty} x(t)\, dt; \qquad x(0) = \int_{-\infty}^{\infty} X(f)\, df$$

$$\int_{-\infty}^{\infty} |x(t)|^2\, dt = \int_{-\infty}^{\infty} |X(f)|^2\, df \qquad \text{(Parseval)}$$

$$\int_{-\infty}^{\infty} x(t) y^*(t+\tau) e^{-j2\pi\nu t}\, dt = \int_{-\infty}^{\infty} X(f+\nu) Y^*(f) e^{-j2\pi f\tau}\, df$$

Figure 2: Some Properties of Fourier Transforms. (From [4])

Table XIII.1—Short Table of Fourier Transforms

	$x(t)=\int_{-\infty}^{\infty} X(f)e^{j2\pi ft}\,df$		$X(f)=\int_{-\infty}^{\infty} x(t)e^{-j2\pi ft}\,dt$
a)	$\delta(t)$	$\Longleftrightarrow$	1
b)	1	$\Longleftrightarrow$	$\delta(f)$
c)	$e^{-\pi(t/\tau)^2}$	$\Longleftrightarrow$	$\tau e^{-\pi(f\tau)^2}$
d)	$e^{-\alpha t}u(t)$	$\Longleftrightarrow$	$\dfrac{1}{\alpha+j2\pi f},\quad \alpha>0$
e)	$u(t)$	$\Longleftrightarrow$	$\dfrac{\delta(f)}{2}+\dfrac{1}{j2\pi f}$
f)	$\operatorname{sgn} t=\begin{cases}1, & t>0\\ -1, & t<0\end{cases}$	$\Longleftrightarrow$	$\dfrac{1}{j\pi f}$
g)	$\dfrac{1}{\pi t}$	$\Longleftrightarrow$	$-j\operatorname{sgn} f$
h)	$e^{-\alpha\lvert t\rvert}$	$\Longleftrightarrow$	$\dfrac{2\alpha}{\alpha^2+(2\pi f)^2}$
i)	$e^{j2\pi f_0 t}$	$\Longleftrightarrow$	$\delta(f-f_0)$
j)	$\sin 2\pi f_0 t$	$\Longleftrightarrow$	$\dfrac{\delta(f-f_0)-\delta(f+f_0)}{2j}$
k)	$\cos 2\pi f_0 t$	$\Longleftrightarrow$	$\dfrac{\delta(f-f_0)+\delta(f+f_0)}{2}$
l)	$e^{j2\pi f_0 t}u(t)$	$\Longleftrightarrow$	$\dfrac{\delta(f-f_0)}{2}+\dfrac{1}{j2\pi}\left[\dfrac{1}{f-f_0}\right]$
m)	$\sin 2\pi f_0 t\,u(t)$	$\Longleftrightarrow$	$\dfrac{\delta(f-f_0)-\delta(f+f_0)}{4j}+\dfrac{1}{2\pi}\left[\dfrac{f_0}{f_0^2-f^2}\right]$
n)	$\cos 2\pi f_0 t\,u(t)$	$\Longleftrightarrow$	$\dfrac{\delta(f-f_0)+\delta(f+f_0)}{4}+\dfrac{1}{j2\pi}\left[\dfrac{f}{f^2-f_0^2}\right]$
o)	$\dot{\delta}(t)$	$\Longleftrightarrow$	$j2\pi f$
p)	$te^{-\alpha t}u(t),\quad a>0$	$\Longleftrightarrow$	$\dfrac{1}{(\alpha+j2\pi f)^2}$
q)	t	$\Longleftrightarrow$	$\dfrac{j\dot{\delta}(f)}{2\pi}$
r)	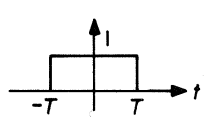	$\Longleftrightarrow$	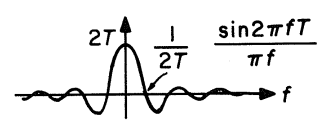
s)	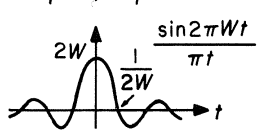	$\Longleftrightarrow$	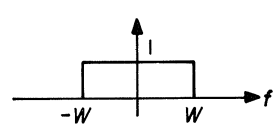
t)	$\sum_{n=-\infty}^{\infty}\delta(t-nT)$	$\Longleftrightarrow$	$\dfrac{1}{T}\sum_{n=-\infty}^{\infty}\delta\left(f-\dfrac{n}{T}\right)$

Figure 3: Some Fourier Transform Pairs (From [4])

B Notation and Properties of Second Order Processes

B.1 Definitions

55. A second-order random variable is one with a finite variance. A second-order random process is a random process made up of second-order random variables.

56. Let $X(t)$ and $Y(t)$ be a pair of jointly second-order, (possibly) complex-valued random processes. Define second-order moment functions:

    (a) *Mean:* $m_X(t) = \mathrm{E}\{X(t)\}$.

    (b) *Autocorrelation functions:*

    $$\begin{array}{l} R_X(t,s) = \mathrm{E}\{X^*(t)X(s)\} \\ \tilde{R}_X(t,s) = \mathrm{E}\{X(t)X(s)\} \end{array}.$$

    (c) *Cross correlation functions:*

    $$\begin{array}{l} R_{XY}(t,s) = \mathrm{E}\{X^*(t)Y(s)\} \\ \tilde{R}_{XY}(t,s) = \mathrm{E}\{X(t)Y(s)\} \end{array}.$$

    (d) *Autocovariance functions:*

    $$\begin{array}{l} C_X(t,s) = \mathrm{E}\{(X(t)-m_X(t))^*(X(s)-m_X(s))\} \\ \tilde{C}_X(t,s) = \mathrm{E}\{(X(t)-m_X(t))(X(s)-m_X(s))\} \end{array}.$$

    (e) *Cross covariance functions:*

    $$\begin{array}{l} C_{XY}(t,s) = \mathrm{E}\{(X(t)-m_X(t))^*(Y(s)-m_Y(s))\} \\ \tilde{C}_{XY}(t,s) = \mathrm{E}\{(X(t)-m_X(t))(Y(s)-m_Y(s))\} \end{array}.$$

57. Documentation of correlation and covariance properties:

    (a) Note that $C_{XY}(t,s) = R_{XY}(t,s) - m_X^*(t)m_Y(s)$, etc.

    (b) The (instantaneous) power of a second-order random process $X(t)$ is defined to be

    $$R_X(t,t) = C_X(t,t) + |m_X(t)|^2.$$

    (c) Autocorrelations and autocovariances are non-negative definite functions on $\mathcal{R}^2$.

    (d) A cross correlation/covariance must satisfy $R_{XY}(t,s) = R_{YX}^*(s,t)$ and:

    $$[\mathrm{Re}\{R_{XY}(t,s)\}]^2 \leq R_{XX}(t,t)R_{YY}(s,s).$$

58. X is said to be *wide-sense stationary* if $m_X(t)$, $R_X(t,t+u)$, and $\tilde{R}_X(t,t+u)$ are constant w.r.t. t. In this case we define

$$\begin{aligned} \mu_X &\stackrel{\text{def}}{=} m_X(t) \\ \rho_X(u) &\stackrel{\text{def}}{=} R_X(t,t+u) \\ \tilde{\rho}_X(u) &\stackrel{\text{def}}{=} \tilde{R}_X(t,t+u). \end{aligned}$$

59. X and Y are said to be jointly WSS if they are individually WSS and if $R_{XY}(t, t+u)$ and $\tilde{R}_{XY}(t, t+u)$ are constant w.r.t. t.

B.2 LTI Filtering

60. The output of a linear (possibly time-varying), bounded-input/bounded-output stable system driven by a second-order random process is well-defined and second-order.

61. Although our favorite idealized brickwall filters are not BIBO they may be approximated arbitrarily closely by BIBO systems.

62. Two second-order random processes are said to be equivalent if they are equal in mean-square, i.e., if
$$\mathrm{E}\{|X(t) - Y(t)|^2\} = 0$$
for all t. The outputs of LTI BIBO systems driven by second-order processes are only defined up to this notion of equivalence.

63. We say that a second-order random process X has frequency content only in a set $f \in F$ if it is equal in mean-square to
$$W(t) = \int h_F(t-u)X(u)\mathrm{d}u; \quad H_F(f) = 1_F(f).$$

64. If X is a second-order process which is input to a BIBO stable LTI system with impulse response $h(t)$, then the system output Y is also a second-order process and
$$\begin{aligned}
m_Y(t) &= \int h(t-u)m_X(u)\mathrm{d}u \\
R_{XY}(t,s) &= \int h(s-u)R_X(t,u)\mathrm{d}u = [h * R_X(t,\cdot)](s) \qquad (4) \\
\tilde{R}_{XY}(t,s) &= \int h(s-u)\tilde{R}_X(t,u)\mathrm{d}u = [h * \tilde{R}_X(t,\cdot)](s) \\
R_Y(t,s) &= \int h^*(t-u)R_{XY}(u,s)\mathrm{d}u = [h^* * R_{XY}(\cdot,s)](t) \qquad (5) \\
&= \int\int h^*(t-u)h(s-v)R_X(u,v)\mathrm{d}v\mathrm{d}u \\
\tilde{R}_Y(t,s) &= \int h(t-u)\tilde{R}_{XY}(u,s)\mathrm{d}u = [h * \tilde{R}_{XY}(\cdot,s)](t) \\
&= \int\int h(t-u)h(s-v)\tilde{R}_X(u,v)\mathrm{d}v\mathrm{d}u
\end{aligned}$$
where h^* is just the pointwise conjugate of h.

65. In form of block diagrams we illustrate the previous equations:

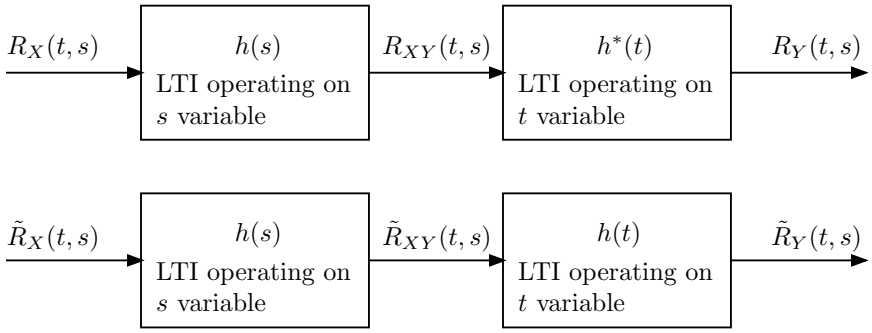

66. If X is WSS then Y is also WSS with

$$\begin{aligned}
\mu_Y &= \mu_X \int h(t)\mathrm{d}t \\
\rho_Y(u) &= \left[\bar{h} * h * \rho_X\right](u) \\
\tilde{\rho}_Y(u) &= \left[\bar{\bar{h}} * h * \tilde{\rho}_X\right](u)
\end{aligned}$$

where $\bar{\bar{h}}(t) \stackrel{\text{def}}{=} h(-t)$ and $\bar{h}(t) \stackrel{\text{def}}{=} h^*(-t)$. In terms of transfer functions and power spectral densities we have:

$$\begin{aligned}
\mu_Y &= \mu_X H(0) \\
S_Y(f) &= |H(f)|^2 S_X(f) \\
\tilde{S}_Y(f) &= H(f)H(-f)\tilde{S}_X(f).
\end{aligned}$$

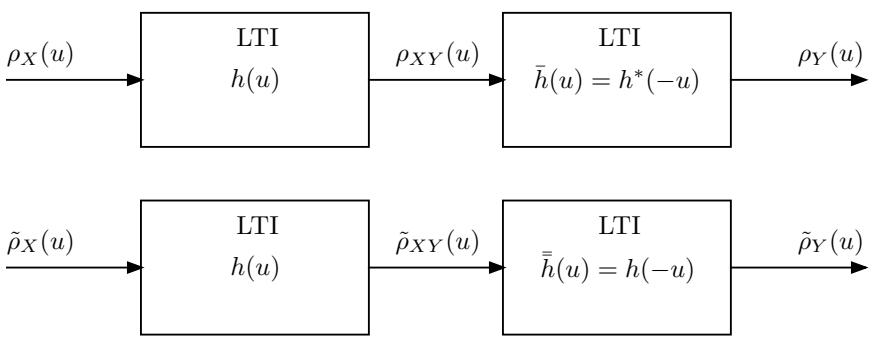

C Block Diagram Calculus to Identify the Complex Baseband Models

60. To verify the form of the equivalent complex baseband models given previously we go through a series of block diagram manipulation steps out of which falls the simple model desired. These are shown in the following sequence of figures starting from Figure 4 to Figure 9.

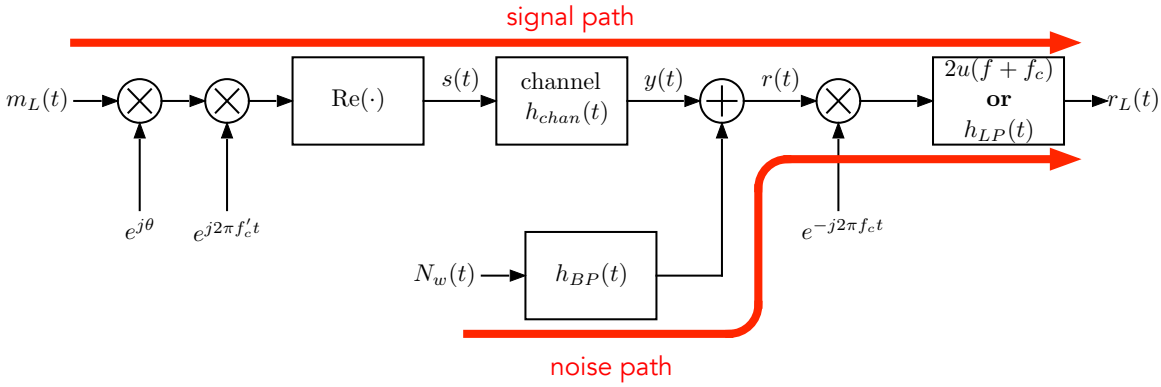

Figure 4: Signal and noise paths may be considered separately since the system in question is linear.

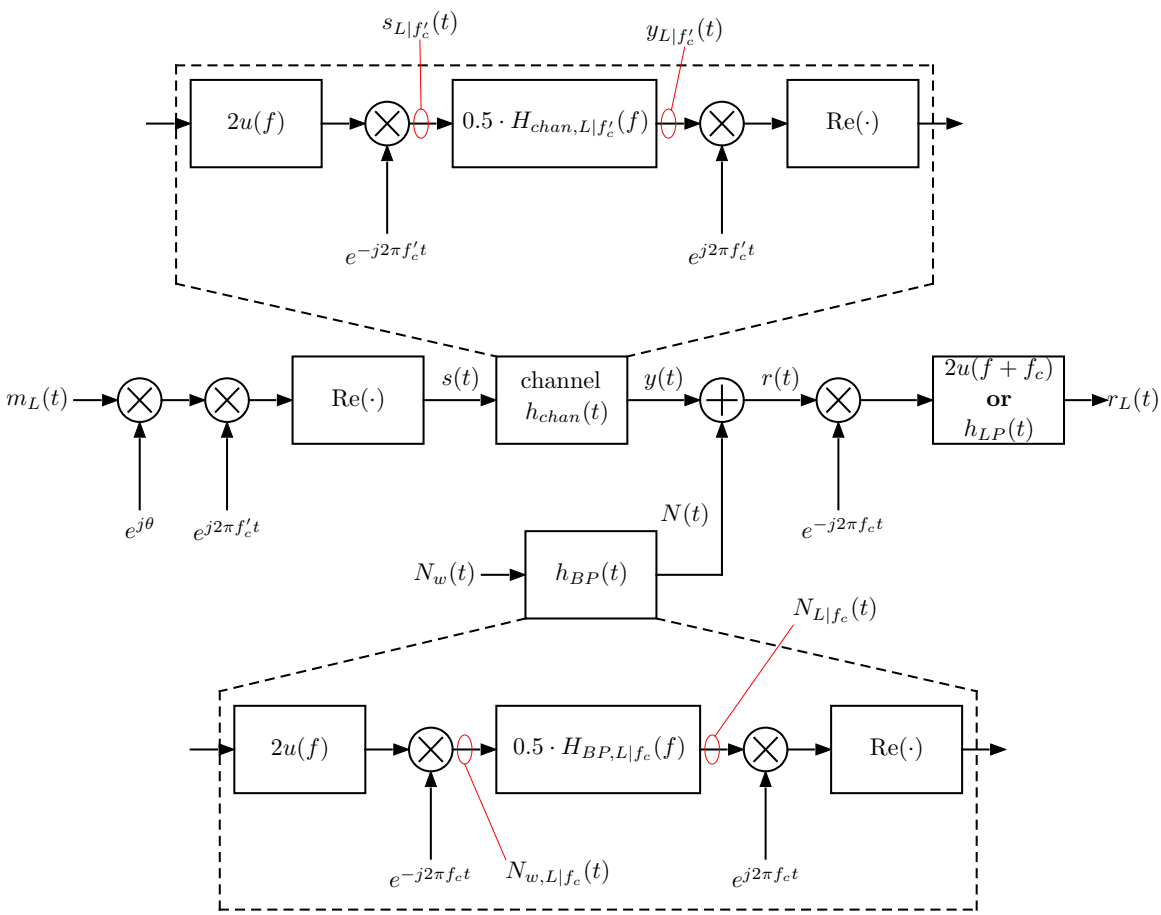

Figure 5: Observe the equivalent block diagrams for doing bandpass filtering in the complex baseband domain.

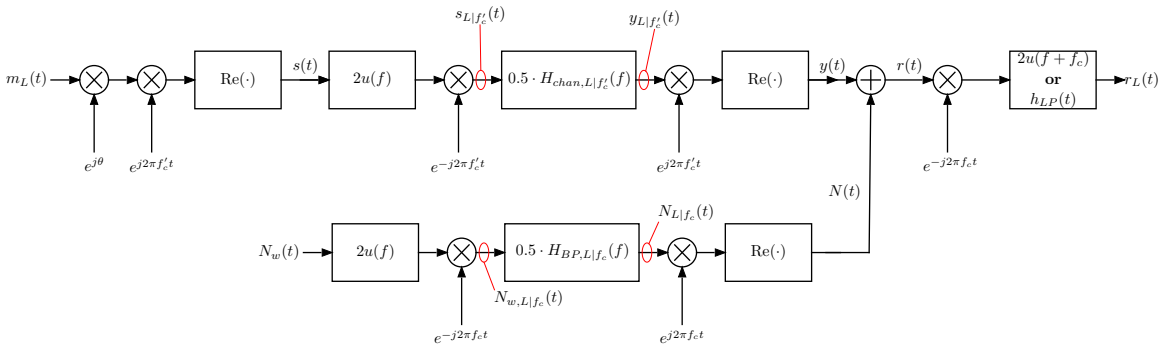

Figure 6: Insert the equivalent block diagrams for doing bandpass filtering in the complex baseband domain.

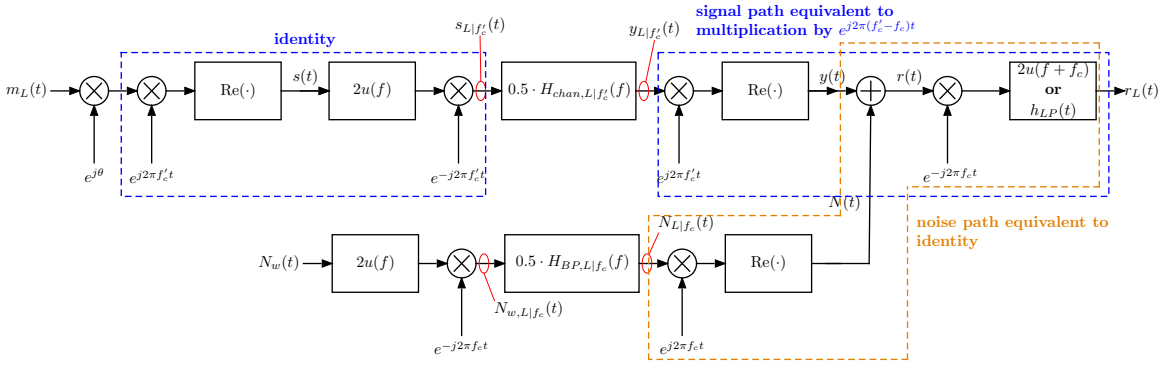

Figure 7: Identify simplifications in the previous block diagram.

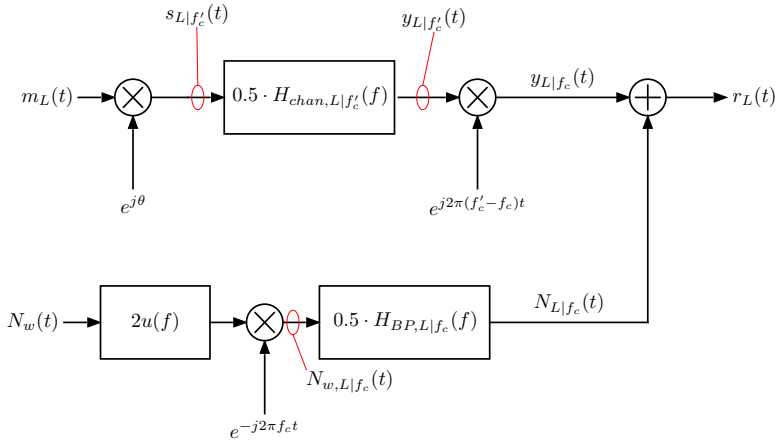

Figure 8: Replace blocks with simplifications.

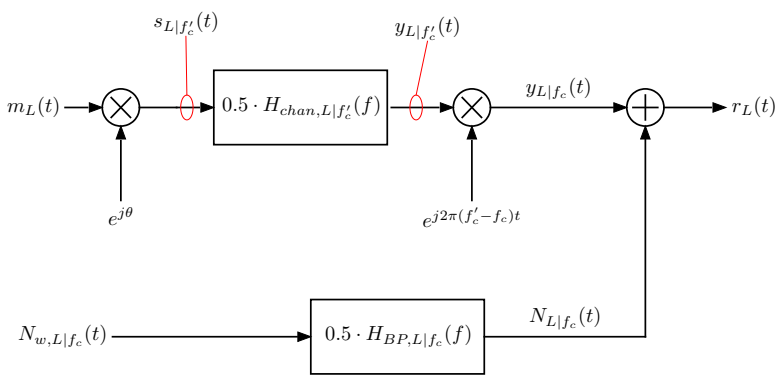

Figure 9: Model – complex baseband at input and complex baseband at output.

References

[1] H. Meyr, M. Moenclaey, and S. A. Fechtel. *Digital Communication Receivers*. Wiley, New York, 1998.

[2] Athanasios Papoulis. *The Fourier Integral and its Applications*. McGraw-Hill, New York, 1962.

[3] F. D. Neeser and J. L. Massey. Proper complex random processes with applications to information theory. *IEEE Info. Theory*, 39:1293–1302, July 1993.

[4] W. M. Siebert. *Circuits, Signals, and Systems*. The MIT Press, Cambridge, MA, 1986.

Comparing CBB Model to Real-Valued — Chk That SNR Answers Agree

Notes from S22-24 cover pages 217 – 250

Final/Simplest Model p21 of Handout

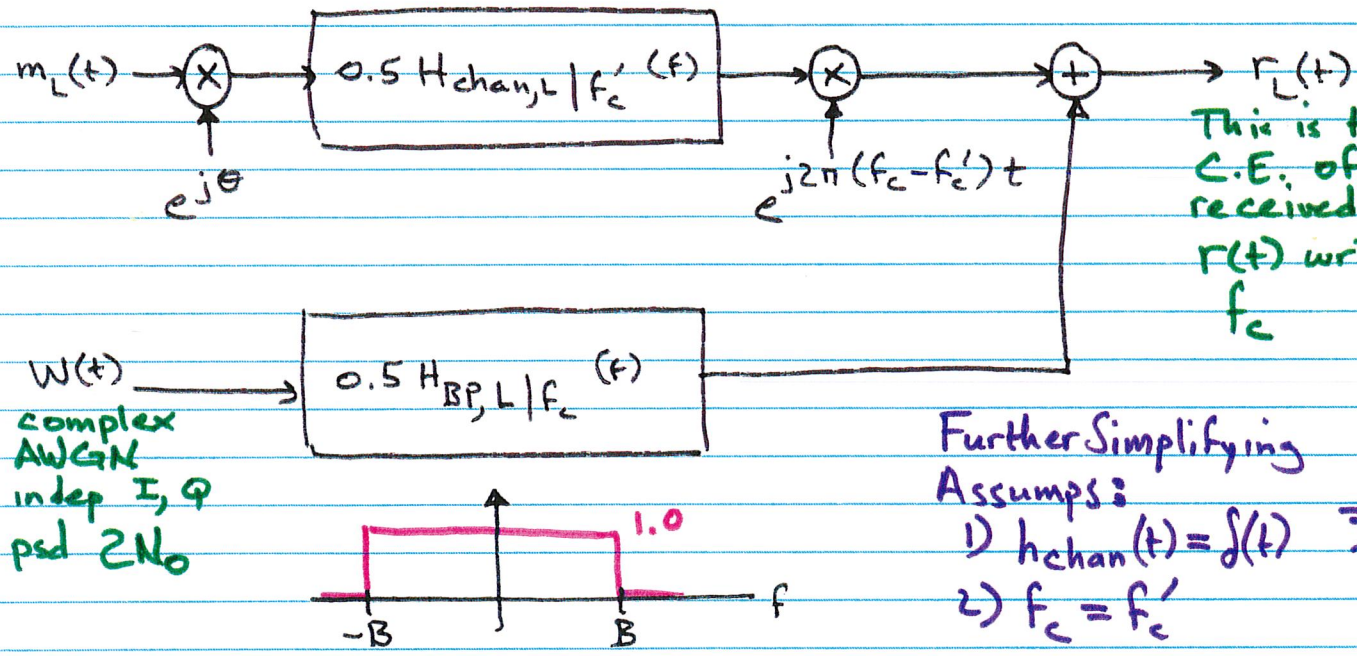

Further Simplifying Assumps:

1) $h_{chan}(t) = \delta(t)$
2) $f_c = f_c'$

$\Longrightarrow$ Then

1.

Simplified Models

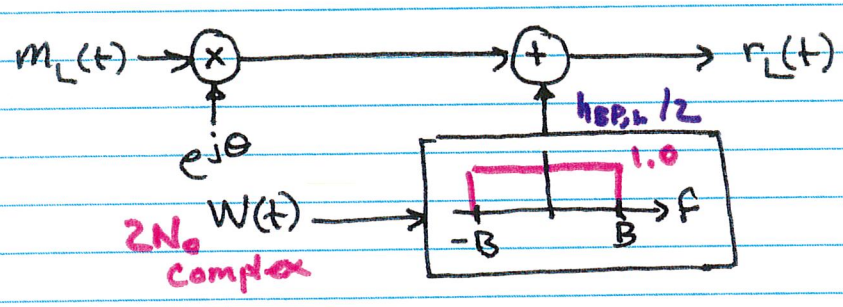

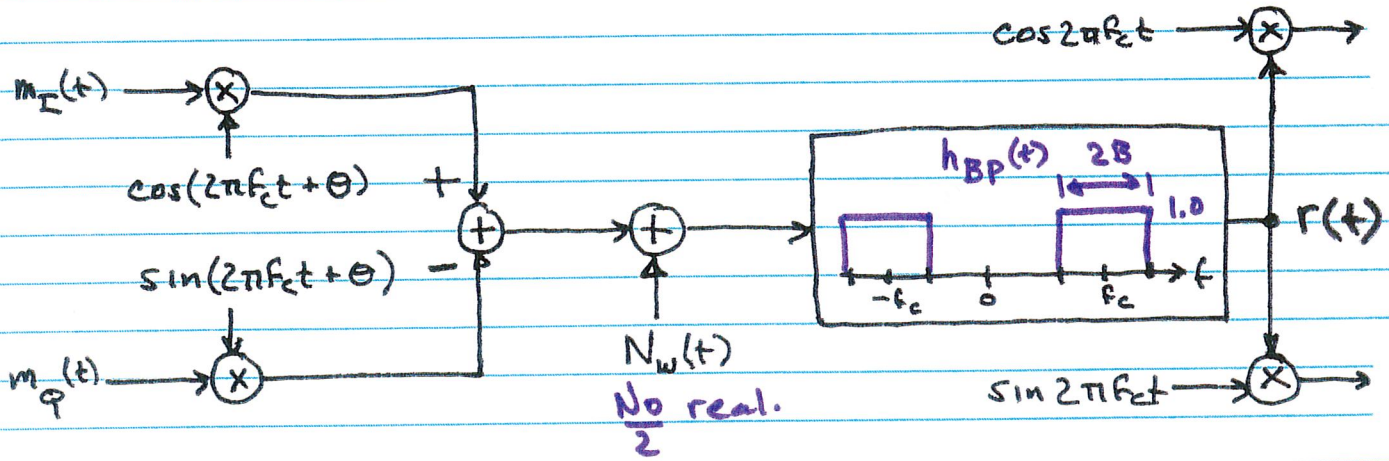

2

Formula For SNR @ IF

For DSB: (real model) $m_Q(t) = 0$, $m_I(t) = A_c m(t)$

$$r(t) = A_c m(t)\cos(2\pi f_c t + \theta) + h_{BP} * N_w(t)$$

$$SNR = \frac{\text{Power}\{A_c m(t)\cos(2\pi f_c t + \theta)\}}{\text{Power}\{h_{BP} * N_w(t)\}}$$

$$= \frac{0.5 A_c^2 P_m}{2 N_0 B}$$

Equal!

For DSB (complex model): $m_L(t) = A_c m(t)$

$$r_L(t) = A_c m(t) e^{j\theta} + \underbrace{h_{BP,L}}_{0.5} * W(t)$$

$$SNR = \frac{\text{Power}\{A_c m(t) e^{j\theta}\}}{\text{Power}\{0.5 h_{BP,L} * W(t)\}} = \frac{A_c^2 P_m}{4 N_0 B}$$

3

Formula for SNR after Demod.

For DSB (real)

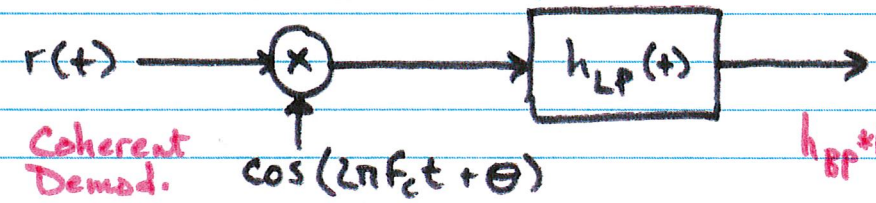

$0.5 A_c m(t) + h_{BP} * N_w(t)\cos(2\pi f_c t + \theta) * h_{LP}$

... See S8.5 p83

$$SNR_D = \frac{\text{Power}\{0.5 A_c m(t)\}}{\text{Power}\{(h_{BP} * N_w(t)\cos(2\pi f_c t + \theta)) * h_{LP}(t)\}}$$

$$= \frac{0.25 A_c^2 P_m}{0.5 N_0 B}$$ assuming $B = W$

Equal

For DSB (complex)

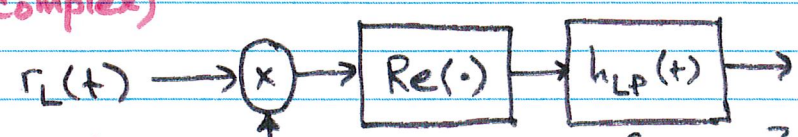

$A_c m(t) + \tilde{W}_I * h_{BP}(t)$

Coherent Demod. $e^{-j\theta}$

$$SNR_D = \frac{\text{Power}\{A_c m(t)\}}{\text{Power}\{\tilde{W}_I * h_{BP}\}} = \frac{A_c^2 P_m}{2 B N_0}$$ assuming $B = W$.

4

A Detail of Note

The coherent demod in complex case is ...

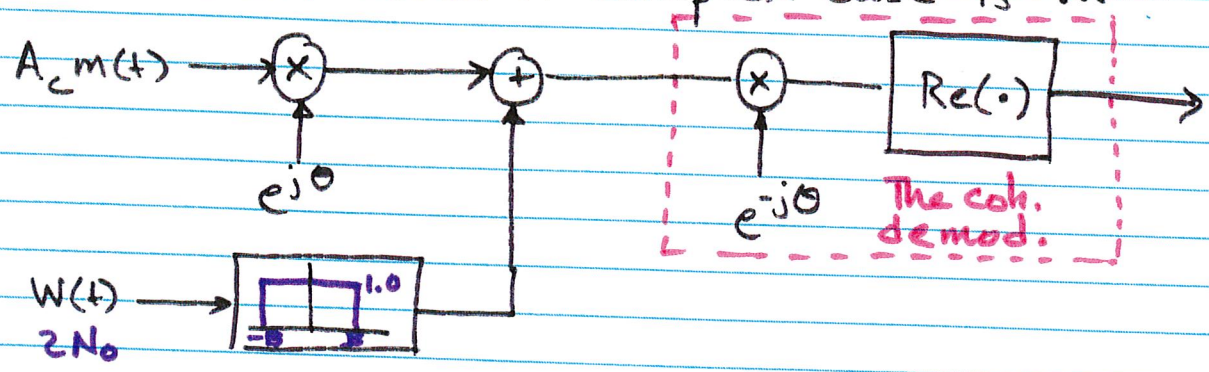

The noise part in the demod output is the real part of ...

$$= \left[W * \left\{ \begin{matrix} \text{ideal LPF} \\ \text{of BW} = B \end{matrix} \right\}(t) \right] e^{-j\theta}$$

- $W(t) = W_I(t) + j W_Q(t)$ → psd heights $2N_0$ for W, N_0 for W_I, W_Q, W_I indep W_Q
- $\tilde{W}(t) \triangleq \left\{ \begin{matrix} \text{ideal LPF} \\ \text{of BW} = B \end{matrix} \right\} * W(t)$
  ↳ $\text{pow}\{\tilde{W}\} = 4BN_0$, $\text{pow}\{\tilde{W}_I\} = 2BN_0$
- $e^{-j\theta}\tilde{W}(t)$ does not change power.

5

For You: Work Through This Comparison for

1) AM-LC @ IF + coherently demod. AM-LC

2) SSB @ IF + coherently demod. SSB.

6.

Discrimnator Demodulator + Noise

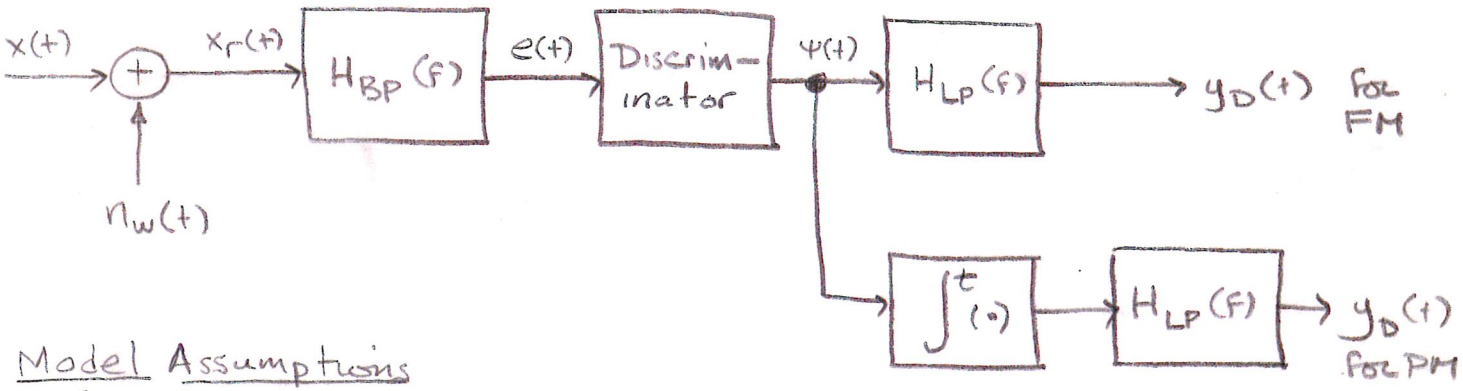

Model Assumptions

- $\{m(\cdot)\}$ WSS ; $R_{m,m}(\tau) \leftrightarrow S_{m,m}(f)$; $S_{m,m}(f) = 0 \quad |f| > W$
- $x(t) = A_c \cos(2\pi f_c t + \phi(t) + \Theta)$; Θ unif. on $[0, 2\pi)$.
- $\{n_w(\cdot)\}$ AWGN ; spectral height $N_0/2$
- $\{m(\cdot)\} \perp\!\!\!\perp \{n_w(\cdot)\} \perp\!\!\!\perp \{\Theta\}$.

- FM $\phi(t) = 2\pi f_d \int^t m(s)\,ds$

  PM $\phi(t) = k_p m(t)$

- Receiver Filter

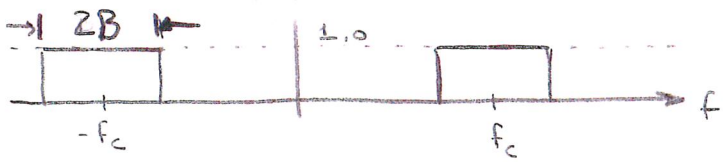

$H_{BP}(f)$ (linear phase ok)

- e(t) → Ideal Discrim-inator → $\Delta(t)$

  Say $e_L(t) = A_e(t)\, e^{j\phi_e(t)}$ be C.E. of e(t). Then

  $$\Delta(t) = \frac{1}{2\pi} K_d \dot{\phi}_e(t)$$

- post detection filter

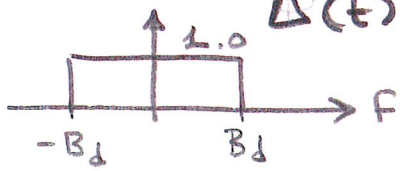

$H_{LP}(f)$ linear phase ok

Design and Performance Calculations

$$x_r(t) = x(t) + n_w(t)$$

Use Carson's rule to choose B large enough:

$$2B = 2(D+1)W \qquad \text{where} \quad \Delta f \triangleq f_d \max_t |m(t)|$$
$$D \triangleq \Delta f / W.$$

$$\Longrightarrow \quad e(t) = [x * h_{BP}](t) + [n_w * h_{BP}](t)$$
$$= \underbrace{x(t)}_{\text{approximately so.}} + n(t)$$

9.

Noise PSDs wrt carrier f_c

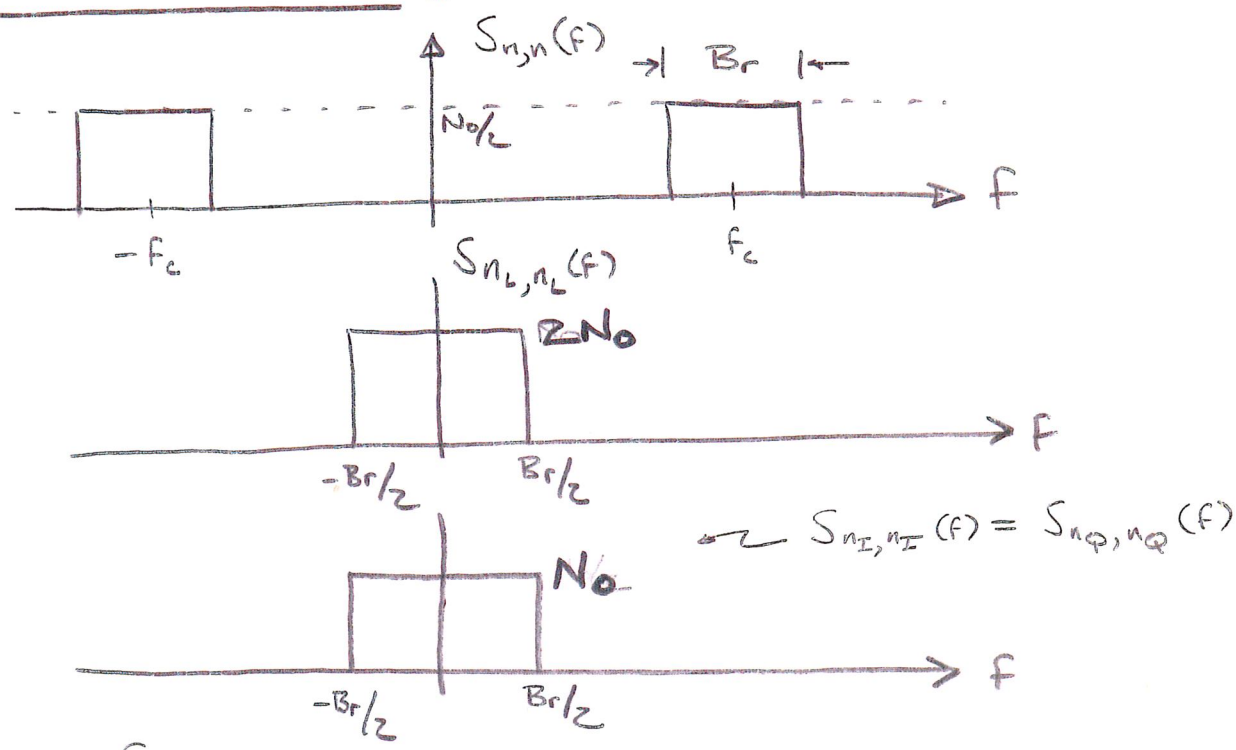

Also have: $S_{n_I,n_Q}(f) \equiv 0$.

10.

CBB Model For FM

Start with Simplest Model
... $h_{chan} = \delta$, $f_c = f_c'$

$$\phi(t) = 2\pi f_d \int_{-\infty}^{t} m(s)\, ds$$

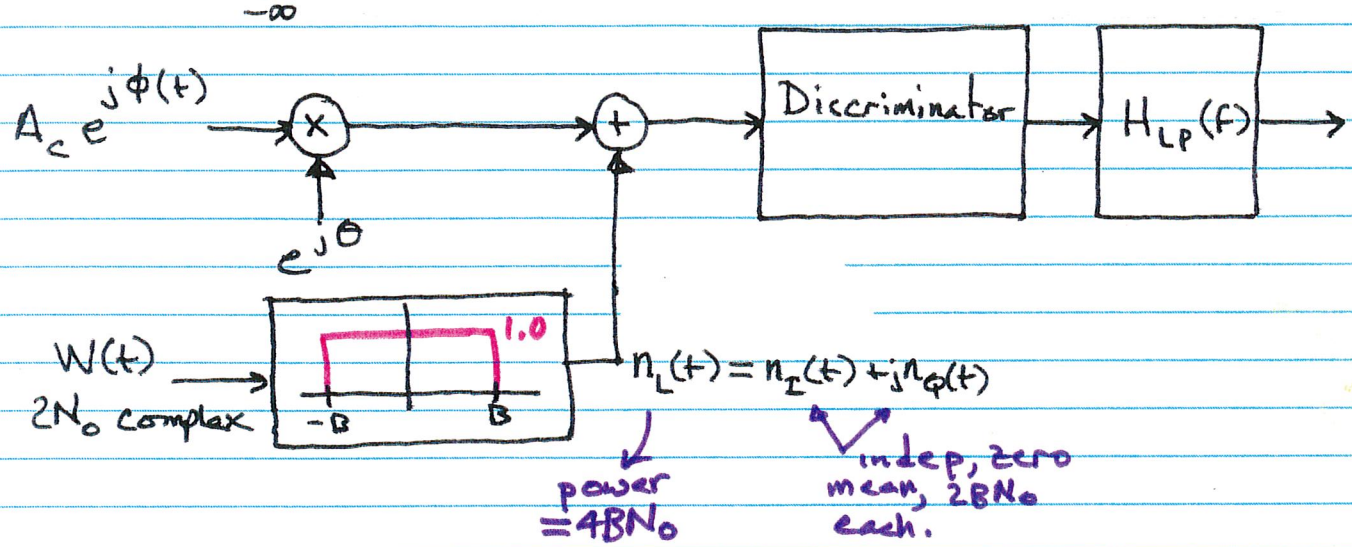

Input to Discriminator

$$e_L(t) = A_c e^{j\phi(t)} e^{j\theta} + n_I(t) + j n_Q(t)$$
$$= A_c e^{j\phi(t)} e^{j\theta} + |n_L(t)| e^{j\angle n_L(t)}$$

But let's factor out the phase offset θ

$$e_L(t) = e^{j\theta}\left[A_c e^{j\phi(t)} + n_L(t) e^{-j\theta}\right]$$

$\tilde{n}_L(t) = e^{-j\theta} n_L(t)$ has exactly the same statistical behavior as $n_L(t)$.

12.

Input to Discriminator (Again)

$$e_L(t) = e^{j\theta}\left[A_c e^{j\phi(t)} + n_L(t)\right]$$

$$\left[A_c \cos\phi(t) + n_I(t)\right] + j\left[A_c \sin\phi(t) + n_Q(t)\right]$$
$$\triangleq A_e(t)\, e^{j\phi_e(t)}$$

(the $e^{j\theta}$ term will not affect the disc. output since θ is constant.)

Output of discriminator is proportional to the derivative of the phase of the input: $\Delta(t) = \frac{K_d}{2\pi}\dot{\phi}_e(t)$

13.

For our purpose it is better to write

$$n_L(t) = r_n(t)\, e^{j\phi_n(t)}$$

$$\underset{\theta=0}{\Longrightarrow} \quad e_L(t) = A_c e^{j\phi(t)} + r_n(t)\, e^{j\phi_n(t)}$$

$$= e^{j\phi(t)} \underbrace{\left[A_c + r_n(t)\, e^{j[\phi_n(t) - \phi(t)]} \right]}_{\triangleq\, A(t)\, e^{j\psi(t)}}$$

$$\Longrightarrow \quad e_L(t) = e^{j\phi(t)} A(t)\, e^{j\psi(t)}$$

where

$$A(t) = \sqrt{\left[A_c + r_n(t)\cos(\phi_n(t) - \phi(t))\right]^2 + r_n^2(t)\sin^2(\phi_n(t) - \phi(t))}$$

$$\psi(t) = \arctan\left(\frac{r_n(t)\sin(\phi_n(t) - \phi(t))}{A_c + r_n(t)\cos(\phi_n(t) - \phi(t))} \right).$$

↳ phase deviation due to noise

Output of Ideal Discriminator

$$\Delta(t) = \frac{1}{2\pi} K_d\, \dot{\phi}_e(t) = \frac{1}{2\pi} K_d \left\{ \dot{\phi}(t) + \dot{\psi}(t) \right\}$$

related to message

"noise" term.

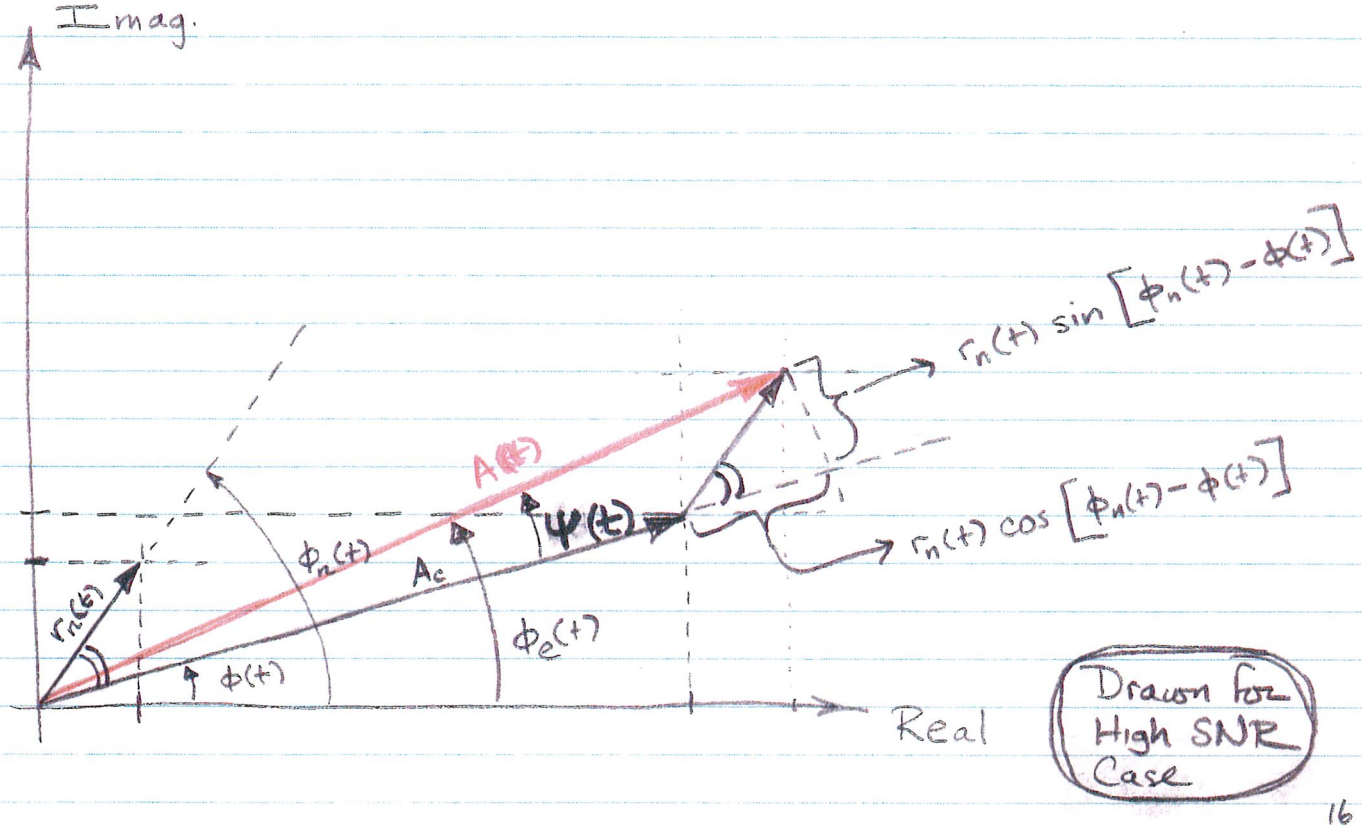

16

Now some approximations

Say SNR large @ input to discriminator $\Longrightarrow$ $A_c \gg r_n(t)$ most of time

$$\therefore \psi(t) = \arctan\left(\frac{r_n(t)\sin(\phi_n(t)-\phi(t))}{A_c + r_n(t)\cos(\phi_n(t)-\phi(t))}\right)$$

$$\approx \arctan\left(\frac{r_n(t)\sin(\phi_n(t)-\phi(t))}{A_c}\right)$$

But argument of arctan is $\ll 1$ in absolute value. Taylor series about 0:

$$\arctan(x) = x - \frac{x^3}{3} + \frac{x^5}{5} - \dots \quad \text{for } x^2 < 1$$

17

$\therefore$ Keeping only the first term in the expansion

$$\psi(t) \approx \frac{r_n(t)}{A_c} \sin\left[\phi_n(t) - \phi(t)\right]$$

Then under the <u>high SNR assumption</u>

$\boxed{\text{FM}}$
$$y_D(t) = \text{LPF}\left\{\frac{1}{2\pi} K_d \dot{\phi}(t) + \frac{1}{2\pi} K_d \dot{\psi}(t)\right\}$$
$$= \text{LPF}\left\{\frac{1}{2\pi} K_d 2\pi f_d m(t) + \frac{1}{2\pi} K_d \dot{\psi}(t)\right\}$$

$\boxed{\text{PM}}$
$$y_D(t) = \text{LPF}\left\{\frac{1}{2\pi} K_d \phi(t) + \frac{1}{2\pi} K_d \psi(t)\right\}$$
$$= \text{LPF}\left\{\frac{1}{2\pi} K_d k_p m(t) + \frac{1}{2\pi} K_d \psi(t)\right\}.$$

18

The design of LPF needs to be st message is undistorted ie $B_d \geq W$:

$\boxed{\text{FM}}$
$$y_D(t) = \frac{1}{2\pi} K_d \underbrace{2\pi f_d}_{\triangleq k_f} m(t) + \text{LPF}\left\{\frac{1}{2\pi} K_d \dot{\psi}(t)\right\}$$

$\boxed{\text{PM}}$
$$y_D(t) = \frac{1}{2\pi} K_d k_p m(t) + \text{LPF}\left\{\frac{1}{2\pi} K_d \psi(t)\right\}$$

<u>Signal Power in $y_D(\cdot)$</u>

$$P_s = \text{signal power}\left\{y_D(t)\right\} = \begin{cases} \left(\frac{1}{2\pi} K_d k_f\right)^2 P_m & \boxed{\text{FM}} \\ \left(\frac{1}{2\pi} K_d k_p\right)^2 P_m & \boxed{\text{PM}} \end{cases}$$

N.B. There is sig. pow. in $\psi(t)$ and $\dot{\psi}(t)$; but it is regarded as noise.

19

PSDs of $\psi(t)$ and $\dot{\psi}(t)$ for high SNR

$\boxed{\text{N.B.}}$ even with the high SNR assumption, the relation between "signal" $\phi(t)$ and "noise" $\phi_n(t)$ in $\psi(t)$ is nonlinear:

$$\psi(t) \cong \frac{r_n(t)}{A_c} \sin\left[\phi_n(t) - \phi(t)\right]$$

ie <u>cannot</u> compute responses to signal and noise alone and then add them up.

Still we will do it anyway.

Thus, for high SNR at disc. input and zero signal ie $\phi(t) = 0$;

$$\psi(t) \approx \frac{r_n(t)}{A_c} \sin\left[\phi_n(t) - \phi(t)\right] = \frac{r_n(t) \sin\left[\phi_n(t)\right]}{A_c}$$

$$= \frac{n_Q(t)}{A_c}$$

$$\Longrightarrow \quad S_{\psi,\psi}(f) \cong \frac{1}{A_c^2} S_{n_Q,n_Q}(f) = \begin{cases} \dfrac{N_0}{A_c^2} & |f| < B \\ 0 & \text{else.} \end{cases}$$

Recall that differentiation corresponds to a transf. funct: $j2\pi f$

$$S_{\dot{\psi},\dot{\psi}}(f) = (2\pi f)^2 S_{\psi,\psi}(f)$$

$$= \begin{cases} \frac{N_0}{A_c^2}(2\pi f)^2 & |f| < B \\ 0 & \text{else} \end{cases}$$

Quadratic: zero @ $f=0$
large @ $f = \pm B$

22

Noise power @ output (ie $y_D(t)$ for high SNR and $\phi(t)=0$).
$\triangleq P_n$

$\boxed{\text{FM}}$ $$P_n = \left(\frac{1}{2\pi}K_d\right)^2 \int_{-B_d}^{B_d} S_{\dot{\psi},\dot{\psi}}(f)\,df$$

$\boxed{\text{PM}}$ $$P_n = \left(\frac{1}{2\pi}K_d\right)^2 \int_{-B_d}^{B_d} S_{\psi,\psi}(f)\,df$$

23

Require $B_d \geq W$ to avoid signal distortion. Thus set

$$B_d = W$$

for min P_n. Also, typical because of BW expansion that $B > W$ $\Rightarrow$ limits of integrals should be $\pm W$ ie

$$\boxed{\text{FM}} \quad P_n = \left(\frac{1}{2\pi} K_d\right)^2 \frac{N_0}{A_c^2} (2\pi)^2 \int_{-W}^{W} f^2 \, df$$

$$= \frac{K_d^2 N_0}{A_c^2} \frac{1}{3} f^3 \Big|_{-W}^{W}$$

$$= 2 \frac{K_d^2 N_0}{A_c^2} W^3/3$$

$$\boxed{\text{PM}} \quad P_n = \left(\frac{1}{2\pi} K_d\right)^2 \frac{N_0}{A_c^2} \int_{-W}^{W} df$$

$$= \frac{K_d^2 N_0}{A_c^2} \frac{2W}{(2\pi)^2}$$

SNR @ output (ie $y_D(t)$) when SNR is high and "$\phi(t) = 0$."

whatever this means.

$\boxed{\text{FM}}$

$$SNR_D = \frac{\left(\frac{1}{2\pi} K_d k_f\right)^2 P_m}{2\frac{K_d^2 N_0}{A_c^2} \frac{W^3}{3}} = \frac{\left(\overset{f_d}{k_f/2\pi}\right)^2 3A_c^2 P_m}{2 N_0 W^3}$$

$$= 3\left(\frac{f_d}{W}\right)^2 P_m \frac{P_T}{N_0 W} \qquad \left(P_T = \tfrac{1}{2}A_c^2\right)$$

$$= 3\left(\frac{D}{\max|m(t)|}\right)^2 P_m \frac{P_T}{N_0 W} \qquad \left(\text{since } D = \frac{f_d \max|m(t)|}{W}\right).$$

$\boxed{\text{FM cont'd.}}$

$$SNR_D = 3D^2 P_m^{norm} \frac{P_T}{N_0 W} \qquad \left(\text{where } P_m^{norm} = \frac{P_m}{(\max|m(t)|)^2}\right)$$

$\boxed{\text{PM}}$

$$SNR_D = \frac{\left(\frac{1}{2\pi} K_d k_p\right)^2 P_m}{\frac{K_d^2 N_0}{A_c^2} \frac{2W}{(2\pi)^2}} = \frac{k_p^2 A_c^2}{2 N_0 W} P_m$$

$$= k_p^2 P_m \frac{P_T}{N_0 W} \qquad \left(P_T = A_c^2/2\right).$$

Comparisons

1) Coherent detection of DSB-SC : $SNR_D = P_T / N_0 W$

2) " " " SSB : (same as above).

3) Coherent detection of AM-LC : $SNR_D = \underbrace{\left(\frac{k_a^2 P_m}{1+k_a^2 P_m}\right)}_{\text{efficiency term}} \frac{P_T}{N_0 W}$

Aside : Earlier in notes only gave the expression

$$SNR_D = \frac{A_c^2 k_a^2 P_m}{2 N_0 W} \qquad P_T = \frac{1}{2} A_c^2 (1 + k_a^2 P_m) \text{ for AM-LC.}$$

$$= \left(\frac{1+k_a^2 P_m}{1+k_a^2 P_m}\right) \frac{A_c^2 k_a^2 P_m}{2 N_0 W} = \left(\frac{k_a^2 P_m}{1+k_a^2 P_m}\right) \frac{P_T}{N_0 W}.$$

1.

4) Envelope Detection of AM-LC : $SNR_D =$ same as above assuming above threshold.

5) PM with Discriminator Detection : $SNR_D = k_p^2 P_m \frac{P_T}{N_0 W}$

$$= \left[k_p \max |m(t)|\right]^2 P_m^{norm} \frac{P_T}{N_0 W}$$

6) FM with Discriminator Detection : $SNR_D = 3 D^2 P_m^{norm} \frac{P_T}{N_0 W}$

Question

How big can we make factors multiplying $P_T / N_0 W$. ? 2

$\boxed{\text{PM}}$ For PM we had $\phi(t) = k_p m(t)$

If we are unable to determine the difference between phases except modulo 2π, then must keep

$$|\phi(t)| = |k_p m(t)| \leq \pi$$

$$\Longrightarrow \quad k_p^2 P_m \leq \pi^2$$

$\hookrightarrow$ ie the biggest that the gain over linear modulation can be for PM.
(ie $9.94\ dB = 10 \log_{10} \pi^2$).

3.

$\boxed{\text{FM}}$ The gain over linear modulation factor is

$$3 D^2 P_m^{norm} \leq 3 D^2$$

where $D = \dfrac{f_d \max |m(t)|}{W}$ can be made arbitrarily large (Of course $B_{trans} = 2(D+1)W$).

D corresponds to parameter β, which we called the peak phase deviation in case of a sinusoidal modulation

Does not really work however as this assumes high SNR which won't work if increase B_{trans} too much.

4.

BW vs. Output SNR Tradeoff for FM (above threshold)

Say $D \gg 1 \implies B_{trans} \cong 2DW$. Write

$$SNR_D = 3D^2 P_m^{norm} \frac{P_T}{N_0 W} \qquad \left(D = \frac{B_{trans}}{2W} \right).$$

$$= \frac{3}{4} \left(\frac{B_{trans}}{W} \right)^2 P_m^{norm} \left(\frac{P_T}{N_0 W} \right).$$

5.

Pre emphasis / Deemphasis in FM

Recall for FM that $S_{\dot\psi\dot\psi}(f) = \frac{N_0}{A_c^2}(2\pi f)^2 \quad |f| < B$

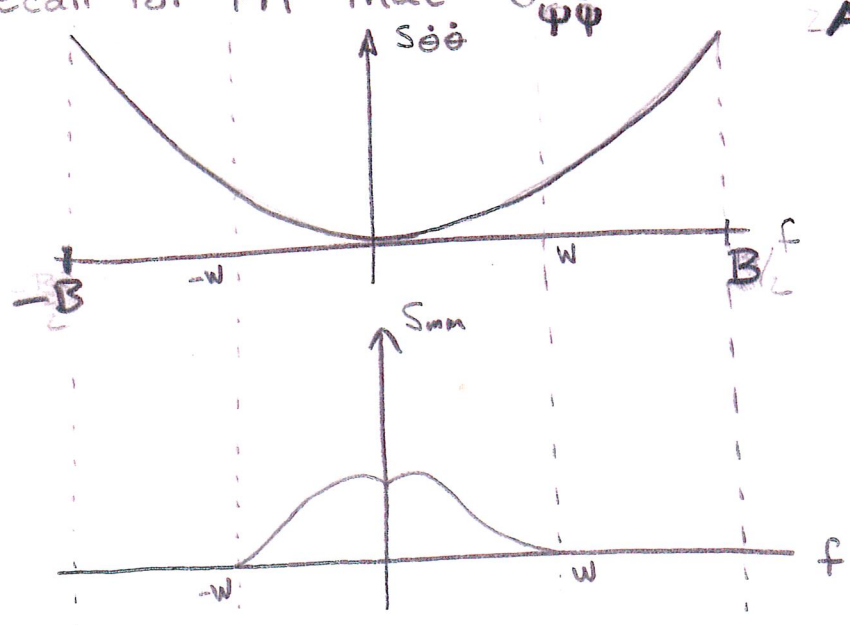

Typical message: $S_{mm}(f) \approx 0$ for f near $\pm W$.

With noise psd as above might conceive of

- Taking B_d slightly smaller than W.
- But often the message distortion is not acceptable.

6.

or....

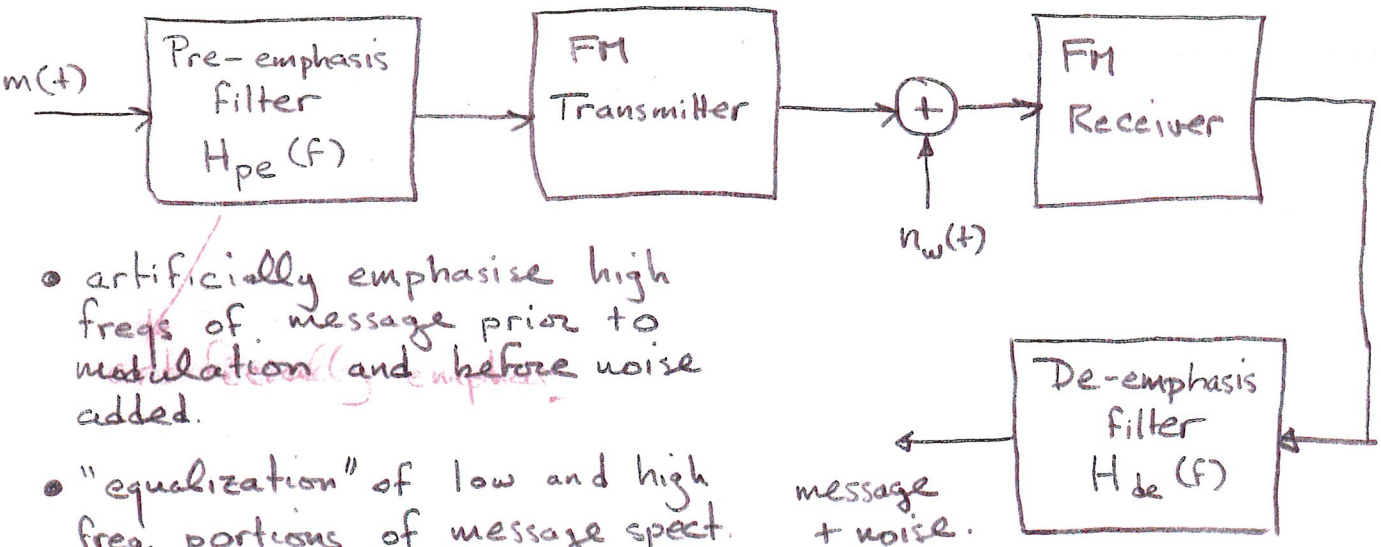

- artificially emphasise high freqs of message prior to modulation and before noise added.
- "equalization" of low and high freq. portions of message spect. so that BW is fully utilized
- inverse operation @ receiver.

7.

<u>To avoid message distortion</u>

$$H_{de}(f) = 1/H_{pe}(f) \qquad -W \le f \le W$$

$\Rightarrow$ note that message power @ output of receiver will be indep. of pre-emph/de-emph.

$\Rightarrow$ Thus for calculation of SNR_D in this instance we only need consider the noise power part.

$$P_{n,\ \text{with de-emph}} = \left(\frac{1}{2\pi} K_d\right)^2 \int_{-W}^{W} S_{\dot{\psi}\dot{\psi}}(f)\, |H_{de}(f)|^2\, df$$

8.

∴ Therefore, SNR_D improvement with use of pre-emph. is

$$\frac{\text{orig. } P_n}{P_{n,\text{ with de-emph}}} = \frac{\int_{-W}^{W} S_{\dot{\psi}\dot{\psi}}(f)\, df}{\int_{-W}^{W} S_{\dot{\psi}\dot{\psi}}(f)\, |H_{de}(f)|^2\, df}$$

$$= \frac{\int_{-W}^{W} f^2 df}{\int_{-W}^{W} f^2 |H_{de}(f)|^2 df} = \frac{2W^3}{3\int_{-W}^{W} f^2 |H_{de}(f)|^2 df}$$

9.

Example of De-emphasis

Consider $H_{pe}(f) = 1 + j\, f/f_o \implies H_{de}(f) = \dfrac{1}{1 + j\, f/f_o}$

$\boxed{\text{Can you think of circuits that might approx these filters?}}$

$$\text{Improvement} = \frac{2W^3}{3\int_{-W}^{W} \frac{f^2}{1 + f^2/f_o^2}\, df} = \frac{(W/f_o)^3}{3\left[(W/f_o) - \tan^{-1}(W/f_o)\right]}$$

Typical # for commercial FM: $f_o = 2.1$ KHz, $W = 15$ KHz

$\implies$ Improvement $= 22$ (ie 13dB)

10.

The "Cost" of Improvement

$H_{pe}(f)$ accentuates high freq. part of message. Such can increase the deviation ratio and hence B_{trans} ...

However, this effect is small.

11.

Modulated Pulse Trains

Unmodulated pulse train carrier:

$$c(t) = \sum_n p(t - nT_s)$$

Elemental pulse: $p(t) \longleftrightarrow P(f)$

Linear PAM Methods: Analog PAM: $x(t) = m(t)\,c(t) = m(t)\sum_n p(t-nT_s)$

Discrete-time PAM: $m_n = m(nT_s) \quad n \in \mathbb{Z}$

$$x(t) = \sum_n m_n\, p(t - nT_s) \quad (*)$$

Digital PAM: m_n are discrete symbols taken from a finite alphabet $m_n \in \mathcal{M} \rightarrow$ use $(*)$

1.

Non-linear PAM Methods:

Discrete time Pulse position modulation (PPM)

$$x(t) = \sum_n p(t - nT_s - k_p m_n)$$

2.

Line Codes

$p_T(t) =$ 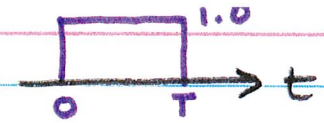

$T =$ bit interval; $\frac{1}{T} =$ bit rate

① NRZ mark $\quad 0 \mapsto -1$, $1 \mapsto +1$ $\quad \pm A p_T(t)$ transmitted.

② NRZ change $\quad \pm A p_T(t)$ is transmitted $\quad 0 \mapsto$ send pulse of same polarity as prev. $\quad 1 \mapsto$ send pulse of opp. polarity as prev.

③ Unipolar RZ $\quad 0 \mapsto$ all zero pulse trans.

$1 \mapsto A p_{T/2}(t)$ trans.

④ Polar RZ $\quad$ same as NRZ except use $\pm A p_{T/2}(t)$

3.

⑤ Bipolar RZ $\quad 0 \mapsto$ all zero pulse trans.

$1 \mapsto$ alternating $\pm A p_{T/2}(t)$ trans.

$\pm A p_T(t)$ called alternate mark inversion

⑥ Split phase (Manchester)

$$g_T(t) = p_{T/2}(t) - p_{T/2}(t - T/2)$$

$$0 \mapsto -A g_T(t)$$

$$1 \mapsto +A g_T(t)$$

4.

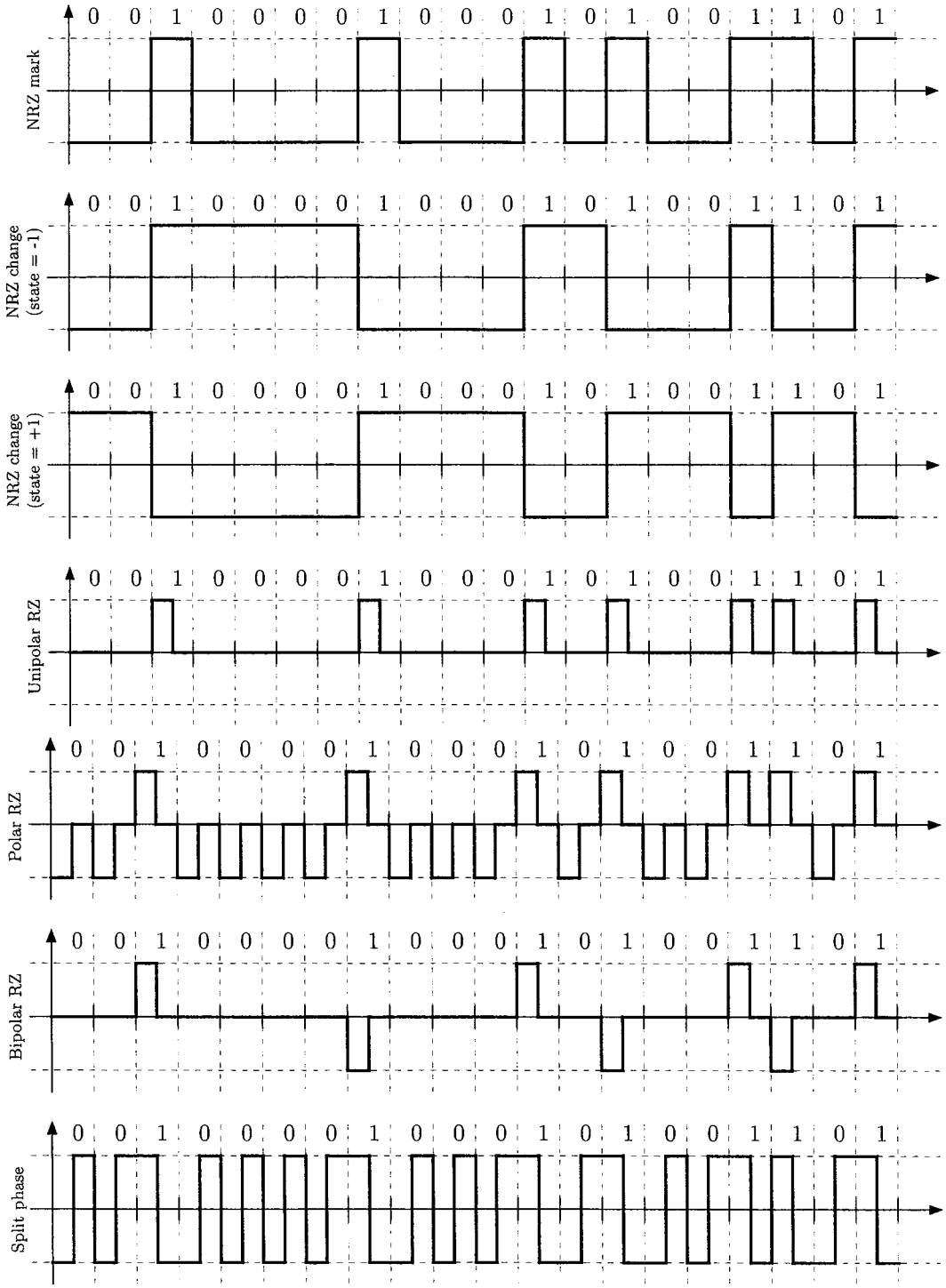

2.1 Why So Many Different Line Codes?

1. Balanced Vs. Unbalanced: Computer and related digital systems often use "on-off" signalling wherein a 0 logic level is represented by a low voltage, say 0 V, and a 1 logic level is represented by a high voltage, say +3 V. Such are called unbalanced or unipolar encodings. It will be

Considerations Re: Line Codes (See Handout)

* Balanced vs. Unbalanced
* Timing Synch.
* Spectral Occupancy

Models for Baseband Modulated Sig — Det. Case

a_k $k \in \mathbb{Z}$ seq. of $\mathbb{R}$ or $\mathbb{C}$ numbers

$p(t) \leftrightarrow P(f)$ a finite energy pulse

$$x(t) = \sum_k a_k \, p(t-kT)$$

$$X(f) = \sum_k a_k e^{-j2\pi kTf} P(f)$$

$$= \left(\sum_k a_k e^{-j2\pi fTk} \right) P(f)$$

DTFT of seq. a_k evaluated @ fT

Conditions for DTFT to converge:
1) a_k non-zero only for finite # k
2) a_k abs. summable
3) a_k square summable
However: $a_k \pm 1$ typ.

However $a_k = \pm 1$ is typical and the seq. may go on forvever ....

Case: $a_k = \pm 1$, $p(t)$ of length T

Energy of basic pulse $a_k p(t-kT)$ is ...

$$= \int_0^T |a_k p(t)|^2 dt = \int_0^T |p(t)|^2 dt = \int_{-\infty}^{\infty} |P(f)|^2 df$$

Average power of $x(t)$

$$= \frac{1}{T}\int_0^T |p(t)|^2 dt = \frac{1}{T}\int_{-\infty}^{\infty} |P(f)|^2 df$$

8.

General Case: Truncate sum to $2N+1$ terms

$$x_N(t) = \sum_{k=-N}^{N} a_k p(t-kT)$$

Energy =

$$\int_{-\infty}^{\infty} |x_N(t)|^2 dt = \sum_{k=-N}^{N} \sum_{\ell=-N}^{N} a_k^* a_\ell \underbrace{R_{pp}((k-\ell)T)}_{\text{pulse autocorr.}}$$

$$\int_{-\infty}^{\infty} p^*(t)\, p(t+(k-\ell)T)\, dt$$

9.

Avg. Power $\approx \frac{1}{(2N+1)T} \int_{-\infty}^{\infty} |x_N(t)|^2 \, dt$

Take limit $N \to \infty$ to get ...

$$\text{Power}[x(t)] = \frac{1}{T} \sum_{m=-\infty}^{\infty} \underbrace{\langle a^*_{\ell+m} a_\ell \rangle}_{\rho_{aa}(m)} R_{pp}(mT)$$

$$\rho_{aa}(m) = \langle a^*_{\ell+m} a_\ell \rangle = \lim_{N\to\infty} \frac{1}{2N+1} \sum_{\ell=-N}^{N} a^*_{\ell+m} a_\ell$$

10.

Models for Baseband Mod. Sig. — Random Case

A_k $k \in \mathbb{Z}$ WSS discrete-time random proc.

Θ unif on $[0, T)$

$\{A_k\} \perp\!\!\!\perp \Theta$

Then $X(t) = \sum_{k=-\infty}^{\infty} A_k \, p(t - kT + \Theta)$

has a stationary auto-corr ...

$$R_{xx}(\tau) = \frac{1}{T} \sum_{m=-\infty}^{\infty} R_{AA}(m) R_{pp}(\tau - mT)$$

$$\updownarrow$$

$$S_{xx}(f) = \frac{1}{T} \left(\sum_{m=-\infty}^{\infty} R_{AA}(m) e^{-j2\pi m f T} \right) |P(f)|^2$$

11.

Sketch Proof of PAM-Spectral-Theorem

$$X(t) = \sum_k A_k\, p(t - kT + \Theta)$$

Complex Case: $\tilde{R}_{XX}(\tau) = E\{X(t)X(t+\tau)\}$

$$R_{XX}(\tau) = E\{X^*(t)X(t+\tau)\}$$

$$= E\left\{\sum_k A_k^*\, p^*(t-kT+\Theta) \sum_\ell A_\ell\, p(t+\tau-\ell T+\Theta)\right\}$$

$$= \sum_k \sum_\ell \underbrace{E\{A_k^* A_\ell\}}_{R_{AA}(\ell-k)} \underbrace{E\{p^*(t-kT+\Theta)\,p(t+\tau-\ell T+\Theta)\}}_{\frac{1}{T}\int_0^T p^*(t-kT+\theta)\,p(t+\tau-\ell T+\theta)\,d\theta}$$

a.

Make a C.O.V. in the sum ... along with some additional manipulation ...

$$R_{XX}(\tau) = \frac{1}{T}\sum_{m=-\infty}^{\infty} R_{AA}(m) \underbrace{\int_{-\infty}^{\infty} p^*(\alpha)\,p(\alpha - mT + \tau)\,d\alpha}_{R_{pp}(\tau - mT)}$$

$R_{pp}(\tau - mT)$ deterministic auto-correlation of the pulse $p(t)$.

$$= \frac{1}{T}\sum_{m=-\infty}^{\infty} R_{AA}(m)\, R_{pp}(\tau - mT)$$

b.

Power Spectral Density

$$S_{xx}(f) = \int_{-\infty}^{\infty} R_{xx}(\tau)\, e^{-j2\pi f\tau}\, d\tau$$

(after some work)

$$= \frac{1}{T}\left(\sum_{m=-\infty}^{\infty} R_{AA}(m)\, e^{-j2\pi m f T}\right)\left|P(f)\right|^2$$

c.

Examples ... see handout and Z+T text

NRZ

Split Phase Manchester

Unipolar RZ.

d.

3.3.1 NRZ

Symbols: A_k are i.i.d. taking values $\pm A$ with equal probabilities.

Symbol autocorrelation: First note that $\mathrm{E}A_k = 0$. Second, if $k \neq l$ $\mathrm{E}A_k A_l = 0$. Third, $\mathrm{E}A_k^2 = A^2$. Therefore

$$R_{AA}(m) = A^2\delta[m] \leftrightarrow S_{AA}(fT) = A^2.$$

Pulse and pulse Fourier Transfom: $p(t) = 1$ for $|t| < T/2$ and $= 0$ otherwise. Therefore

$$P(f) = T\mathrm{sinc}(fT).$$

Power spectrum:

$$S_{XX}(f) = A^2 T\mathrm{sinc}^2(fT).$$

Has spectral nulls at $f = \pm k/T$, $k = 1, 2, \ldots$.

e.

3.3.2 Split Phase Manchester

Symbols: Identical to NRZ.

Symbol autocorrelation: Identical to NRZ.

Pulse and pulse Fourier Transfom: $p(t) = 1$ for $0 < t < T/2$, $= -1$ for $T/2 < t < T$, and $= 0$ otherwise. From table and shifting property:

$$P(f) = jT\mathrm{sinc}(fT/2)\sin(\pi fT/2).$$

Power spectrum:

$$S_{XX}(f) = A^2 T\mathrm{sinc}^2(fT/2)\sin^2(\pi fT/2).$$

Has a spectral null at $f = 0$ and additional nulls at $f = \pm 2k/T$, $k = 1, 2, \ldots$.

f.

3.3.3 Unipolar RZ

Symbols: A_k take values 0 and $+A$ with equal probabilities.

Symbol autocorrelation: First note that $\mathrm{E}A_k = A/2$. Then for

- $m = 0$: $R_{AA}(0) = \mathrm{E}A_k^2 = 0.5(0^2) + 0.5(A^2) = 0.5A^2$.
- $m \neq 0$: $R_{AA}(m) = \mathrm{E}A_k A_{k+m} = (\mathrm{E}A_k)(\mathrm{E}A_{k+m}) = (A/2)^2 = 0.25A^2$.

To find the DTFT of R_{AA}:

$$\begin{aligned} S_{AA}(fT) &= 0.5A^2 + 0.25A^2 \sum_{m=-\infty,\, m\neq 0}^{\infty} e^{-j2\pi fTm} \\ &= 0.25A^2 + 0.25A^2 \sum_{m=-\infty}^{\infty} e^{-j2\pi fTm} \\ &= 0.25A^2 + 0.25A^2 \frac{1}{T} \sum_{n=-\infty}^{\infty} \delta(f - n/T) \end{aligned}$$

Pulse and pulse Fourier Transfom: $p(t) = 1$ for $0 < t < T/2$ and $= 0$ otherwise. Therefore

$$P(f) = \frac{T}{2}\mathrm{sinc}\left(\frac{T}{2}f\right).$$

Power spectrum:

$$\begin{aligned} S_{XX}(f) &= \frac{T}{4}\mathrm{sinc}^2\left(\frac{T}{2}f\right)\left[0.25A^2 + 0.25A^2\frac{1}{T}\sum_{n=-\infty}^{\infty}\delta(f - n/T)\right] \\ &= \frac{A^2T}{16}\mathrm{sinc}^2\left(\frac{T}{2}f\right) + \frac{A^2}{16}\delta(f) + \cdots \\ &\quad \cdots \frac{A^2}{16}\mathrm{sinc}^2(1/2)\left[\delta(f - 1/T) + \delta(f + 1/T)\right] + \cdots \\ &\quad \cdots \frac{A^2}{16}\mathrm{sinc}^2(3/2)\left[\delta(f - 3/T) + \delta(f + 3/T)\right] + \cdots \end{aligned}$$

4 Intersymbol Interference and Nyquist's Criterion

$$x(t) = \sum_k a_k \, p(t-kT)$$

Filtering:

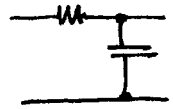

$\tau = RC$

unit step resp.

$$\left(1 - e^{-t/\tau}\right) u(t)$$

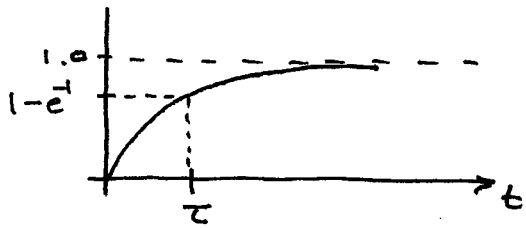

nat. resp. : $e^{-t/\tau} u(t)$

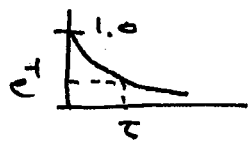

model chan. filtering

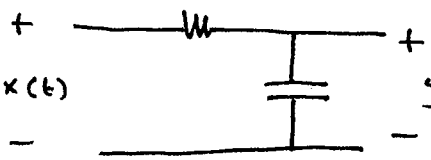

y(t) chan. out.

a_k ±1 NRZ

---- $\tau \ll T$

····· $\tau \approx T$

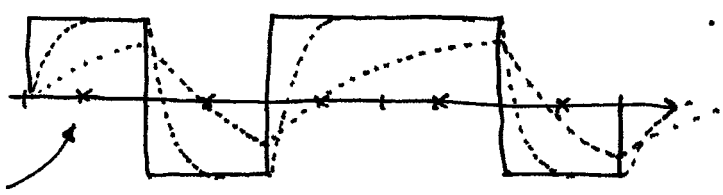

samp times half way ok for $\tau \ll T$

$\leftarrow T \rightarrow$

make bit errors even in absence of noise.

This is ISI

440 Fri 3/25/22

309

Exam 2 Friday Ap 1 50 min.

THE 48 hrs Fri Ap 15 noon → Fri Ap 22 noon.

HW6 → due by 3/30 Wed.

what happened since Exam 1 (Feb. 11)?

P1 DSB Mod + Demod
P2 AM-LC
} no noise.

*Lects pp 1 → 70
*Z+T 7th
Ch2
Ch3
* HWs 1+2
(probs 1 → 15)

Coverage since Ex 1

Lects pp 71 → 80 Z+T Ch8 — SNR as a perf. metric for analog comms.

Formulas for SNR @ IF HW5 P26

81 → 84 Z+T Ch8 — Formulas for SNR @ output of coh. demod (DSB, AM-LC) HW5 P26,27

85 → 94 Z+T Ch3.3 — SSB deterministic analysis

95 → 100 — Software implementation of SSB. HW5 P25

101 → 117 Z+T Ch8 — SSB noise perf. @ IF and @ output of coherent demod. HW5 P26,27

118 → 165 Z+T Ch4 — deterministic analysis of FM and PM HW5 P24, HW6 P31,36

166 → 176 Z+T Ch3.5 — Superhet. receiver HW4 P22

177 → 189 Z+T Ch 2.8 — Complex envelop for det. signals

190 → 205 Z+T Ch 7.5 — Complex valued random proc.

HW3 P16-18

P15 HW2

HW4 P19-21 really cov. deterministic things that could have been on E1

Lects	pp. 206 – 250 (includes handout)	Z+T Ch 7.5	Complex Env. for Real-Valued WSS rand. proc.
	251 – 288	Z+T Ch 8.1, 8.3	Use of C.E. to evaluate SNR @ outputs of non-coh. demodulators such as FM disc. det. and AM-LC env. det. HW5 P28, 29, 30 HW6 P32, 33, 34, 35
Z+T Ch 3.7, 4.5 Ch5	289 – 307		Modulated pulse trains
Z+T Ch 5.4	308 –		Intersymbol interference ...

Remainder of Lecture consisted of hints for P31 & 32 of HW6.

Sample Receiver

$$x(t) = \sum_k a_k\, p(t-kT)$$

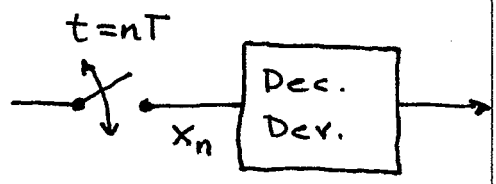

Assuming for simp. that pulses are noncausal ie centered at $t=0$

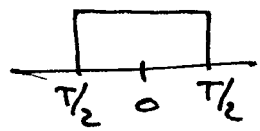

or some such.

$$x_n = x(t)\Big|_{t=nT} = \sum_k a_k\, p((n-k)T)$$

$$= a_n\, p(0) + \underbrace{\sum_{k\neq n} a_k\, p((n-k)T)}_{\text{ISI}}$$

Want

$$p(0) = 1$$

$$p(mT) = 0 \quad \text{for } m \neq 0$$

which is the time-domain cond. for no ISI.

This is a cond. on the time domain resp. of pulse $p(t)$. Examples:

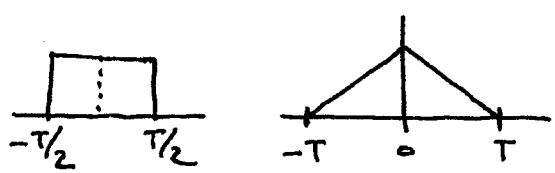

but these take lots of BW.

Spectral domain condition

$$p(t) \longleftrightarrow P(f)$$

$$p(t) = \int_{-\infty}^{\infty} P(f)\, e^{j2\pi f t}\, df$$

$$p(mT) = \int_{-\infty}^{\infty} P(f)\, e^{j2\pi f m T}\, df$$

Break integral up into sections

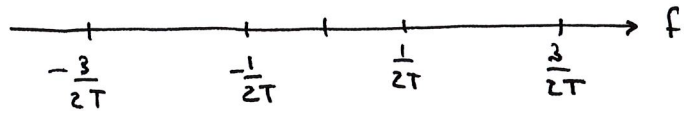

$$\left(\frac{2k-1}{2T}, \frac{2k+1}{2T}\right)$$

$$p(mT) = \sum_k \int_{\frac{2k-1}{2T}}^{\frac{2k+1}{2T}} P(f)\, e^{j2\pi f m T}\, df$$

$$= \sum_k \int_{-1/2T}^{1/2T} P\left(f' + \frac{k}{T}\right) e^{j2\pi f' m T} \underbrace{e^{j2\pi k m}}_{1}\, df'$$

$$\Longrightarrow p(mT) = \int_{-1/2T}^{1/2T} \sum_k P\left(f + \frac{k}{T}\right) e^{j2\pi f m T}\, df$$

$$\lambda = fT$$

$$p(mT) = \int_{-1/2}^{1/2} \frac{1}{T} \sum_k P\left(\frac{\lambda + k}{T}\right) e^{j2\pi \lambda m}\, d\lambda$$

C.O.V.

$$f' = f - \frac{k}{T}$$

$$\Rightarrow \frac{2k+1}{2T} - \frac{2k}{2T} = 1/2T$$

$$\Rightarrow \frac{2k-1}{2T} - \frac{2k}{2T} = -\frac{1}{2T}$$

$$\Rightarrow 2\pi\left(f' + \frac{k}{T}\right) mT = 2\pi f' m T + 2\pi k m$$

An inverse DTFT. DTFT pairs are !

Want $p_m = p(mT) = \begin{cases} 1 & m=0 \\ 0 & m \neq 0 \end{cases}$

Note that

$$\int_{-1/2}^{1/2} 1 \cdot e^{j2\pi\lambda m} \, d\lambda = \begin{cases} 1 & m=0 \\ 0 & m \neq 0 \end{cases}$$

$\therefore$ By uniqueness

$$1 = \frac{1}{T} \sum_k P\left(\frac{\lambda + k}{T}\right) \qquad |\lambda| \leq 1/2$$

$$1 = \frac{1}{T} \sum_k P\left(f + \frac{k}{T}\right) \qquad |f| \leq 1/2T$$