Distributed Model Predictive Control for Building HVAC systems: A Case Study

Vamsi PUTTA[1]*, Donghun KIM[2],Jie Cai[2], Jianghai HU[1], James BRAUN[2]

[1]School of Electrical and Computer Engineering, Purdue University,
West Lafayette, IN, United States
{vputta, jianghai}@purdue.edu

[2]School of Mechanical Engineering, Purdue University,
West Lafayette, IN, United States
{kim1077, cai40, jbraun}@purdue.edu

* Corresponding Author

ABSTRACT

Model based predictive control (MPC) in building HVAC systems incorporate predictions of weather and occupancy to determine the optimal operating setpoints. However, application of MPC strategies to large buildings might not be real time feasible due to the large number of degrees of freedom in the underlying optimization problem. Decomposing the problem into several smaller sub-problems to be solved in parallel is one way to circumvent the high computational requirements. Such an approach, termed Distributed MPC, requires certain approximations about the underlying sub-problems to converge to a consistent solution thus leading to a trade-off between computational load and optimality. In this paper, we present a simulation based evaluation for a Distributed MPC formulation for a case study based on a medium sized commercial building. Results indicate that distributed MPC can offer near optimal control at a fraction of the computational time that centralized optimization based MPC requires while maintaining occupant comfort.

1. INTRODUCTION

Optimal control of building heating, ventilation and air-conditioning (HVAC) systems has been receiving increased attention in the wake of climate change and soaring energy prices. However, operating building HVAC systems in an "optimal" way can be infeasible in real time, primarily due to the large number of decision variables to be controlled and the non-linear models involved.

Model predictive control (MPC) has long been viewed as a practical solution for complex control problem involving non-linear dynamics and general cost functions. Efforts have been made to formulate and solve the optimal HVAC operation problem in an MPC framework(Ma et al., 2010; Oldewurtel et al., 2010; Putta et al., 2013; Wallace et al., 2011). MPC based approaches also have the benefit of being capable of incorporating weather forecasts, utility pricing and occupancy profiles into the optimization. However, the large number of decision variables involved can make such approaches prohibitively slow for implementation in large buildings.

In this paper, we approach the problem of optimal HVAC control from a distributed MPC perspective. Such an approach enables us to decompose the original problem with a large number of decision variables into smaller optimization problems that can be solved simultaneously. The resulting solutions can be aggregated to obtain the solution of the original problem. Previous works in this direction include (Koehler & Borrelli, 2013; Ma et al., 2011; Moroşan et al., 2010; Putta et al., 2012). Utilizing a multi-zone building case study, we conduct a simulation based evaluation of a distributed MPC formulation and discuss the various features in comparison with conventional MPC implementation.

The paper is organized as follows. In Section 2, we discuss the building and HVAC system models considered for the case study. The optimal control problem is formulated in a MPC framework in Section 3. This formulation is subsequently extended to a distributed optimization based formulation in Section 4. Section 5 presents the results of

the simulation based evaluation of the proposed formulation. Conclusions are drawn and future directions are given in Section 6.

2. CASE STUDY

2.1 Envelope Model

We use a state space model of the north wing of B101 situated at the Philadelphia Navy Yard as our case study. This building is typical of a medium sized commercial building. The north wing comprises of 20 separate occupant spaces which are served by 9 VAV boxes fed by a single AHU and DX unit. For the purpose of this study, we demarcate 9 control zones served by individual VAV boxes. Utilizing energy balance at discrete nodes in the walls and air, we obtained a forward state space model that describes the building envelope dynamics. The obtained model has a high dimension that makes it impractical for control purposes. We utilize model order reduction, described in (Kim & Braun, 2012), to reduce the number of states to facilitate control design. After model order reduction and discretization, the dynamics can be written as

$$\begin{aligned} x(k+1) &= Ax(k) + BQ(k) + Fw(k) \\ T_z(k) &= Cx(k) \end{aligned} \tag{1}$$

where A, B, F and C represent the system matrices of reduced dimension obtained via model order reduction and t denotes the discrete time instant. The state vector $x(\cdot)$ represents a transformed vector containing information about the temperatures of the wall and air nodes. Physical significance of each component of the state vector is not explicit due to the transformation. The vector $u(\cdot)$ represents the input vector comprising of controllable inputs that act directly on the internal temperatures (rate of energy added by AHU, internal gains) and the matrix B encapsulates the effect of these inputs on the system. Vector $w(\cdot)$ denotes the exogenous (uncontrollable) inputs acting on the envelope (solar radiation, ground radiation). The relation between the zone temperature $T_z(\cdot)$ and the state vector $x(\cdot)$ is modeled by the output matrix C. For the model at hand, the state space had a dimension of 586 while the controllable inputs $Q(k) \coloneqq [Q_1(k), Q_2(k), \dots, Q_9(k)]^T$ has a dimension of 9 corresponding to the sensible cooling provided by the VAV boxes. The output vector contains the temperature of the 9 control zones.
The matrix A is not sparse leading to coupling among the states. This makes the problem of long horizon optimal control more complicated due to the necessity of considering the interactions among the states.

2.2 Equipment Model

The DX unit supplying the north-wing was modeled using input-output measurements obtained on site and information of the equipment. The obtained gray box model generates the total power consumption P (fan+compressor) and DX output Q as a function of the sensible cooling (T_s), supplied by the DX unit the supply temperature of the air (T_s), ambient wet-bulb temperature T_{amb}, return temperature T_{ret} and return humidity and humidity ω_{ret}:

$$P = f(Q, T_s; T_{amb}, T_{ret}, \omega_{ret}), \tag{2}$$

Figure 1 summarizes the notation and the schematic of the case study. Each VAV box is associated with an air volume flow rate $\dot{V}_i$ determined by its damper setting and supplies cool air at temperature T_s. The sensible heat extraction rate at each zone can therefore be written as

$$Q_i(k) = \dot{V}_i(k)\rho C_p(T_z(k) - T_s(k))$$

For control purposes, we consider the sensible cooling to each zone $Q_i(\cdot)$ and the supply temperature $T_s(\cdot)$ as the available degrees of freedom. The total sensible cooling and hence the DX unit power consumption is determined by the sum of the individual zone sensible cooling.

$$Q(\cdot) = Q_1(\cdot) + Q_2(\cdot) + \cdots + Q_9(k)$$

The total power consumption of the DX unit is highly nonlinear making it hard to generate a single functional form representation to approximate it. Hence to minimize computational burden during optimization, we approximate the power consumption with a family of quadratic functions as follows.

$$P \approx \begin{bmatrix} Q_1 \\ Q_2 \\ \vdots \\ Q_9 \\ T_s \end{bmatrix}^T H(T_{amb}, T_{ret}, \omega_{ret}) \begin{bmatrix} Q_1 \\ Q_2 \\ \vdots \\ Q_9 \\ T_s \end{bmatrix} + F^T(T_{amb}, T_{ret}, \omega_{ret}) \begin{bmatrix} Q_1 \\ Q_2 \\ \vdots \\ Q_9 \\ T_s \end{bmatrix} + c(T_{amb}, T_{ret}, \omega_{ret}) \tag{3}$$

Here $H(\cdot,\cdot,\cdot)$ (subsequently F) belongs to a family of symmetric 10×10 matrices (10×1 vector respectively) parameterized by the ambient temperature and return conditions. The coefficients of H, F, c are determined through regression. For the case study, the regression led to a mean RMSE of 4% over the family of quadratics.

During the modeling phase, it was observed that the DX unit was most optimal operating at its highest possible supply temperature for any given sensible load. Further investigation revealed that the compressor power consumption outweighed the fan power consumption almost all the time leading to the above scenario. Utilizing this behavior, optimizing one degree of freedom (supply temperature) becomes trivial when the other controlled variables are optimal. We will revisit this fact later when formulating a distributed optimization approach for this case study.

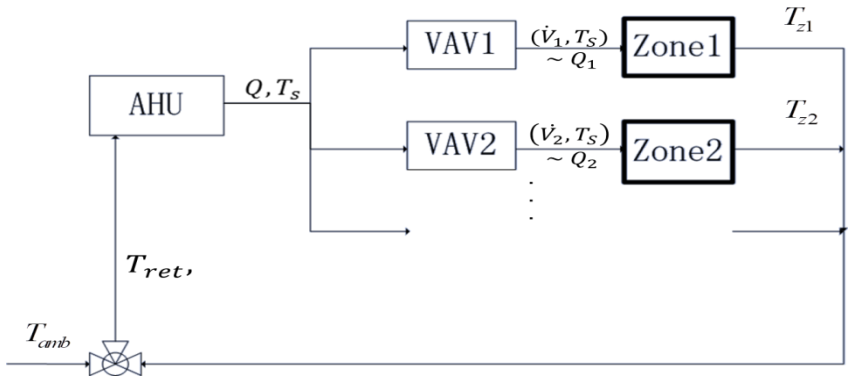

Figure 1: Schematic of the B101 north wing

The next section describes the formulation of the problem in the MPC framework. We define the objective function and explore the need for efficient MPC.

3. OPTIMAL CONTROL PROBLEM

3.1 Model Predictive Control Formulation

Model predictive control anticipates the behavior of the system over a prediction horizon and uses this information to decide upon the optimal action. The optimality of the decision is highly sensitive to the accuracy of the model used for the forecast. Receding horizon control, where the prediction is updated every time instant makes the predictive control more robust towards prediction inaccuracies.

In applications to building supervisory control, model predictive control allows us to incorporate the uncontrollable factors such as variations in the occupancy, utility rates and weather conditions in determining optimal control strategy. Throughout the study, we assume availability of forecasts for all the exogenous inputs over the prediction horizon N_p. We use the inherent robustness of the receding horizon controller to handle inaccuracies in the forecasts. The state space model given by (1) serves as the prediction model for the system as follows

$$\begin{aligned} x(k+t+1|k) &= Ax(k+t|k) + BQ(k+t|k) + Fw(k+t|k) \\ T_z(k+t|k) &= Cx(k+t|k) \end{aligned} \tag{4}$$

Here index $k+t|k$ is used to represent predicted value of the corresponding vector at time $k+t$ given the information at time k. Using these predicted dynamics, we can write the MPC optimal control problem as

$$min \sum_{t=0}^{N_p-1} P(k+t|k)\Delta t \tag{5}$$

Subject to

$$T_{min}(k+t) \leq T_{z,i}(k+t|k) \leq T_{max}(k+t) \tag{5a}$$

$$Q_i(k+t|k) \leq \dot{V}_{i,max}\rho C_p(T_{z,i}(k+t|k) - T_s(k+t|k)) \tag{5b}$$

$$T_s(k+t|k) \in [T_{s,min},\ T_{s,max}] \tag{5c}$$

The term $P(k+t|k)$ represents the predicted power consumption of the DX unit at time $k+t$ based on information at time instant k. Occupant comfort is maintained by constraint (5a) on the zone temperatures in zone i at time. Constraint (5b) and (5c) reflect the equipment constraints in terms of maximum damper settings (Air flow) and compressor limits. The integral nature of energy costs is reflected in the summation over a look ahead horizon of N_p. The cost function is to be minimized subject to the dynamics given in equation (4) over the space of all admissible inputs Q, T_s that do not violate the imposed constraints. At time t the optimal trajectory of both the AHUs ($Q(t+k|k), k = 0,1, \dots, L$) are determined with the first inputs of the sequence $Q(k), T_s(k)$are applied to the corresponding system. At time $k+1$ the cost function and forecasts are updated to reflect the information available and the process repeated. The prediction horizon N_p is chosen to be large enough to sufficiently capture the behavior (such as periodicity) of the exogenous factors. We also presuppose knowledge of the state vectors $x(k)$.

The optimization problem (5) can be solved, with sufficient computational power, in real time to optimize all the degrees of freedom (Sensible cooling and supply temperatures) simultaneously. This optimization strategy can be termed *Centralized MPC* as it requires a central processing unit which has access to all the information about the model. However, as the number of controllable variables increase with increasing look ahead or larger number of zones, the computational complexity of such centralized approaches increases exponentially making the problem infeasible in real time. Hence alternate methods for optimization are necessary. If the coupling amongst zones is small enough, each zone is effectively independent of the other and the optimization can be performed individually for each zone. However for the case study proposed, the power cost is a coupled function (quadratic) of all the degrees of freedoms available making individual optimization suboptimal. We describe a distributed optimization based algorithm that uses information exchange to decouple the cost function and take into account the interaction amongst zones in the following section.

4. DISTRIBUTED MPC FORMULATION

Distributed optimization approaches have proved to be successful in large scale optimization problems. Recently, researchers have tried to apply distributed approaches to optimizing building system operation(Koehler & Borrelli, 2013; Ma et al., 2011; Moroşan et al., 2010; Putta et al., 2012). Distributed approaches reduce computational complexity by decomposing the centralized problem into sub-problems and solving them in parallel.

Noting that the cost function in (5) is coupled in terms of the degrees of freedom (quadratic with cross terms), parallel solution would require decomposition into separable costs. The intuitive splitting here occurs at the zone level with the objective of optimizing each zonal sensible cooling Q_i independently. To do this, we collect the cost function term containing Q_i from equation (3)

$$P_i = Q_i^2 h_{ii} + Q_i \sum_{\substack{j=1\dots9 \\ j\neq i}} h_{ij}Q_j + h_{i,10}\, Q_i T_s + f_i Q_i + c_i \tag{6}$$

For any given values of $\boldsymbol{Q_1}, \boldsymbol{Q_2}, \dots \boldsymbol{Q_9}, \boldsymbol{T_s}$ the summation of $\boldsymbol{P_i}$ yields the total instantaneous power consumption $\boldsymbol{P}$. Hence $\boldsymbol{P_i}$ would represent a cost function corresponding to zone $\boldsymbol{i}$ if all other zones $\boldsymbol{j \neq i}$ had their sensible cooling $\boldsymbol{Q_j}$ and the supply temperature fixed. In fact if $\boldsymbol{Q_j}$ and $\boldsymbol{T_s}$ are assumed to optimal then minimizing $\boldsymbol{P_i}$ would yield the optimal $\boldsymbol{Q_i}$ directly. However, since the optimal values of the other controllable inputs are not available one has to resort to starting with an initial guess for $\boldsymbol{Q_j}, \boldsymbol{j \neq i}$ and $\boldsymbol{T_s}$ and updating the cost function $\boldsymbol{P_i}$ when better choices are available. This implies multiple iterations of optimizing $\boldsymbol{P_i}$ in parallel with some convergence checks.

Performing parallel optimization of the integral cost over a look ahead horizon is complicated by the fact that the state trajectories are coupled as well. Optimizing $Q_i(k+t|k)$ over the look ahead horizon while maintaining the temperature constraints requires knowledge of $Q_j(k+t|k)$ and complete state information at all zones. Since these are updated at every iteration, we need a mechanism of state information exchange among zones. Updating the zone level cost function $P_i(\cdot\,|k)$ is followed by updating predicted state trajectories followed by optimization for $Q_i(\cdot\,|k)$.

The newly found optimal Q_i trajectory is passed to the other zones which update their state trajectories and cost functions and optimize. The whole process is terminated after a sufficient number of iterations. Updating the supply temperature T_s is trivial due to the fact that the DX unit is most efficient at the maximum possible supply temperature. Hence after each round of updates T_S trajectory can be chosen to be the maximum possible based upon the current choices of $\sum Q_i$. By constraint (5b) this is equivalent to checking at least one VAV has its damper fully open. Figure 2 depicts the various steps of the algorithm.

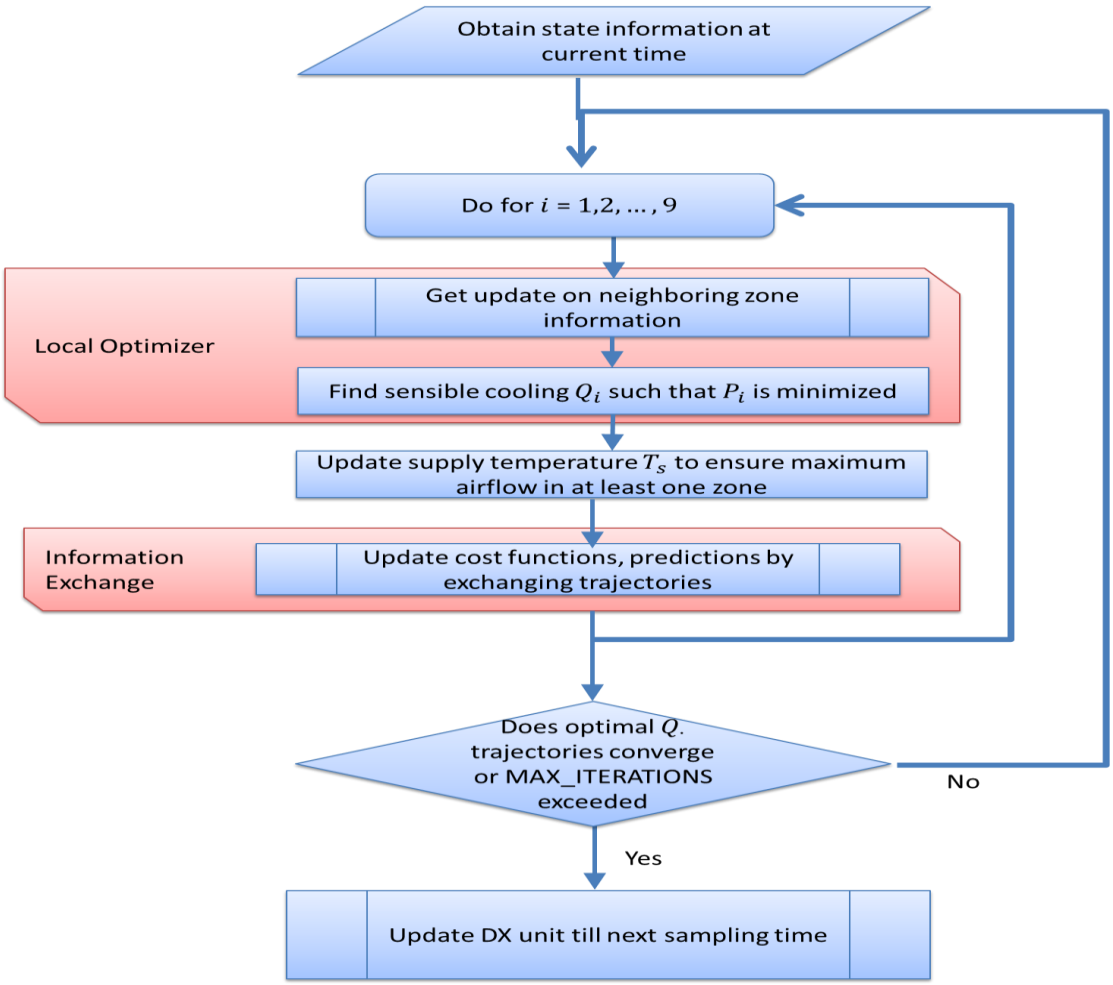

Figure 2: Distributed MPC algorithm

The multiple iteration scheme presented here suffers from the lack of a theoretical convergence result. It is not possible to guess beforehand the number of iterations required for the optimal inputs Q_i (and therefore T_S) to converge. The convergence issue is amplified by the fact that we are dealing with whole trajectories. A heuristic would be to consider only those updates that present a decrease to the total cost function. This would require synchronous updates which would require the presence of a centralized manager dedicated to handling the updates.

As each degree of freedom is optimized simultaneously (synchronously or asynchronously), the total time taken would remain the same irrespective of the number of zones (allowing for time taken to exchange required information). This makes it an attractive approach for large buildings with several zones unlike centralized MPC.

5. SIMULATION RESULTS

To compare distributed MPC to centralized MPC, both approaches were simulated over a 1 month in MATLAB on the multi-zone B101 case study from Section 2. The discretization time step is chosen to be 1 hour. Internal gains were assumed to follow a schedule presented in Figure 2. Existing weather data (TMY2) from May 2010 was used to calculate the solar inputs. A discretization time step of 1 hour was chosen and a 12 day warm up period was chosen to build thermal storage in the building mass. Zone temperatures were constrained within 23^oC and 25^oC during occupied hours (8am to 8pm) for occupant comfort. Occupancy and internal gain schedules were assumed to match the average observed on site. Updates were handled synchronously with each cost function being updated only when all the zones were able to optimize their respective cost functions. A maximum of 5 rounds of updates were utilized with the best result at the end of five rounds selected as the optimal.

Figures 3 and 4 present the main results for two days of the simulation. As observed before the DX unit is most efficient at higher supply temperatures for a given load. We observe that the centralized MPC consistently led to higher supply temperatures during occupied hours compared to the distributed MPC. This can be attributed to the premature truncation of the distributed MPC iteration leading to suboptimal results. Additionally the lower supply temperature of the distributed approach does not correspond to a higher load profile implying inefficient damper settings in the VAV boxes. Since synchronous updates were being used the supply temperature was supposed to be at the maximum permissible level. This is not the case however due to the different distribution of loads amongst the zones. All these factors lead to a performance hit of 10.6 % in terms of energy consumption as seen in Table 1. However, the computational time is decreased by more than half for the same case study. Even though the current case study takes a disproportionately high optimality hit, distributed MPC is still a worthwhile approach for larger buildings where centralized MPC might not be even real time feasible.

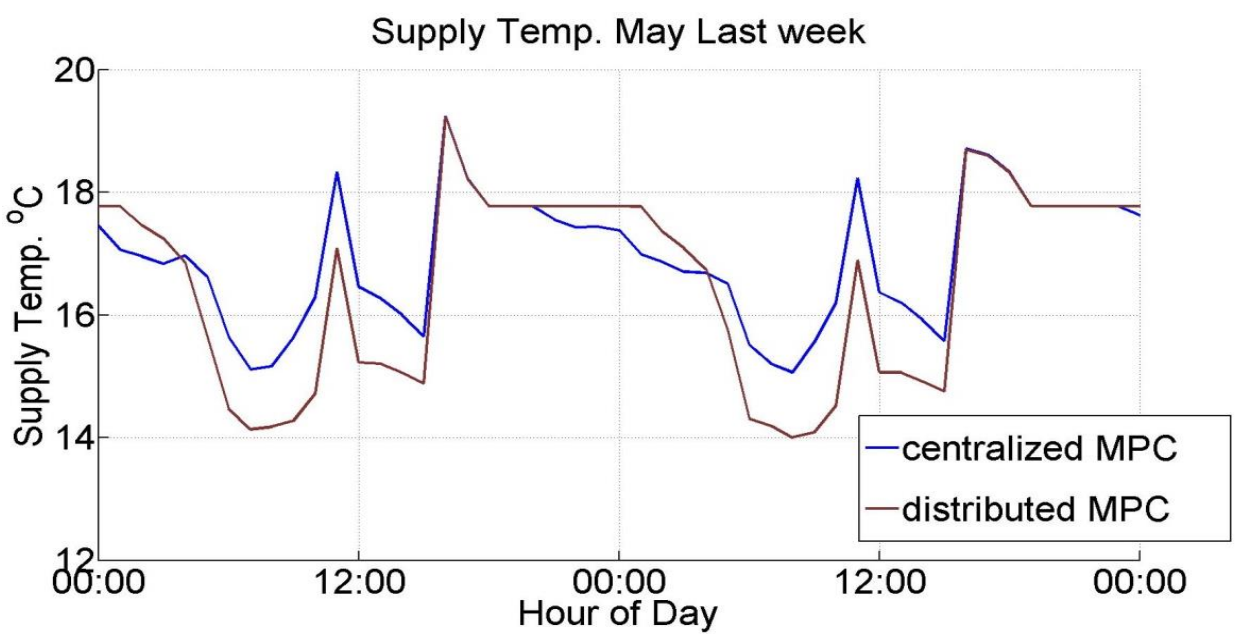

Figure 3: Comparison of centralized and distributed MPC approaches- Supply temperature profile

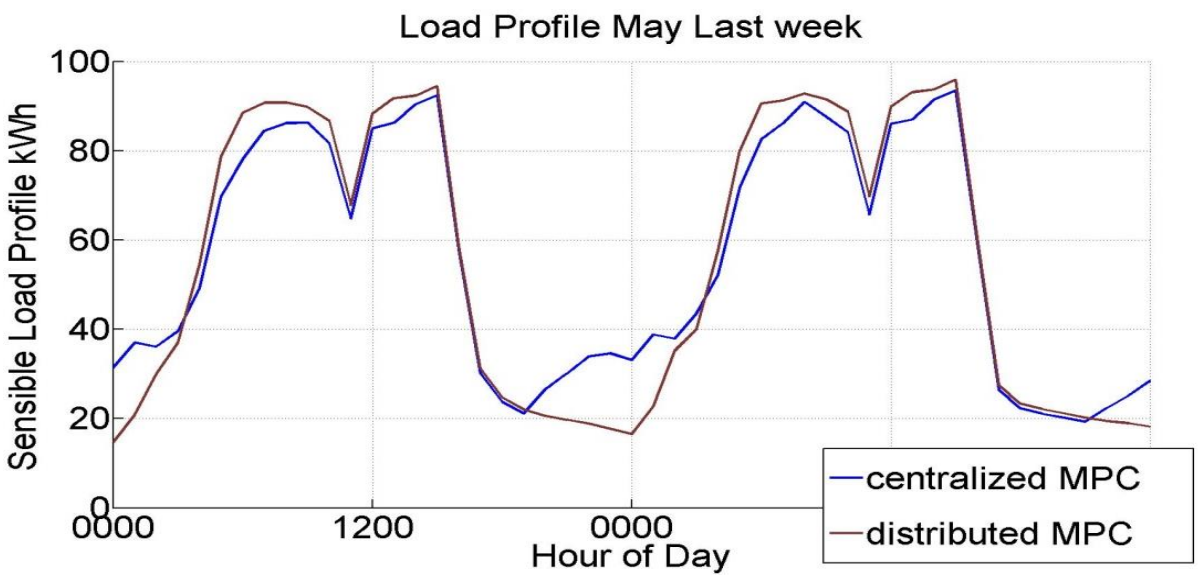

Figure 4: Comparison of centralized and distributed MPC approaches- Cooling load profile

12 hour lookahead MPC	100 day energy consumption	Computational time per decision
Centralized MPC	10183 kWh	20 sec average
Distributed MPC	10972 kWh	8 sec average

Table 1: Comparison of centralized and distributed MPC approaches

6. CONCLUSIONS

A distributed approach to optimal HVAC operation is presented. By exchanging information between independent model predictive controllers, a computationally complex problem can be solved simultaneously in real-time. Distributed MPC is particularly attractive in large buildings where centralized approaches are limited by computational time. Future directions include alternate formulations to decrease the performance hit incurred and applying distributed MPC in a multi-agent framework.

REFERENCES

Kim, D., & Braun, J. E. (2012). Reduced-order building modeling for application to model-based predictive control (Vol. 1, pp. 554–561). Presented at the SimBuild 2012, Madison, Wisconsin.

Koehler, S., & Borrelli, F. (2013). Building temperature distributed control via explicit MPC and "Trim and Respond" methods. *Control Conference (ECC), 2013 European* (pp. 4334–4339). IEEE.

Ma, Y., Anderson, G., & Borrelli, F. (2011). A distributed predictive control approach to building temperature regulation. *American Control Conference (ACC), 2011* (pp. 2089–2094).

Ma, Y., Borrelli, F., Hencey, B., Coffey, B., Bengea, S., & Haves, P. (2010). Model predictive control for the operation of building cooling systems. *American Control Conference (ACC), 2010* (pp. 5106–5111).

Moroşan, P.-D., Bourdais, R., Dumur, D., & Buisson, J. (2010). Distributed model predictive control based on Benders' decomposition applied to multisource multizone building temperature regulation. *2010 49th IEEE Conference on Decision and Control (CDC)* (pp. 3914–3919).

Oldewurtel, F., Parisio, A., Jones, C. N., Morari, M., Gyalistras, D., Gwerder, M., Stauch, V., et al. (2010). Energy efficient building climate control using stochastic model predictive control and weather predictions. *American Control Conference (ACC), 2010* (pp. 5100–5105).

Putta, V., Zhu, G., Kim, D., Hu, J., & Braun, J. (2013). Comparative evaluation of model predictive control strategies for a building HVAC system. *American Control Conference (ACC), 2013* (pp. 3455–3460). IEEE.

Putta, V., Zhu, G., Kim, D., Hu, J., & Braun, J. E. (2012). A Distributed Approach to Efficient Model Predictive Control of Building HVAC Systems. International High Performance Buildings Conference (Paper 83).

Wallace, M., McBride, R., Aumi, S., Mhaskar, P., House, J., & Salsbury, T. (2011). Energy efficient model predictive building temperature control. *Chemical Engineering Science*.

ACKNOWLEDGEMENT

The authors wish to acknowledge Dr. Gwaungwei Zhu for his suggestions.