FROM LAST TIME…

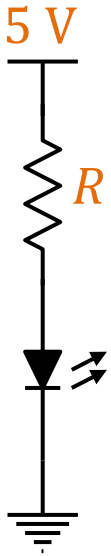

Electronic Systems

- Why electronic systems?
- Passive electronic components
- Electronic system analysis

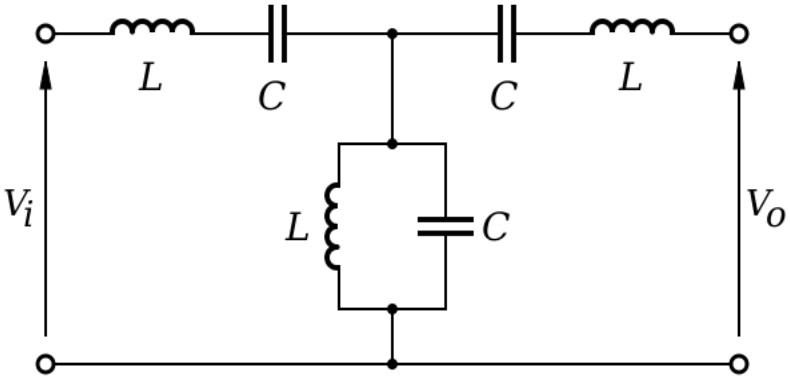

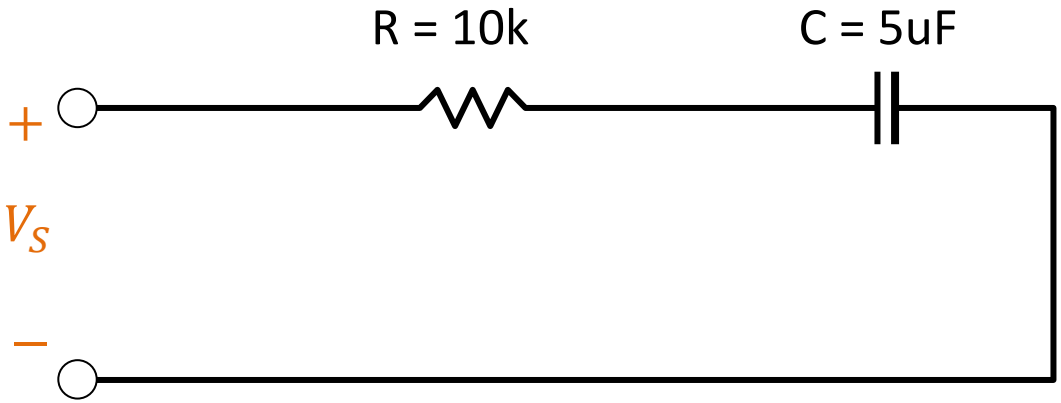

UNIT 2:
ELECTRONIC SYSTEMS

PART B:
ACTIVE ELECTRONICS (DIODES)

NOBEL GASES ARE INERT (DUE TO FULL ATOMIC SHELLS)

							18
							He
		13	14	15	16	17	
		B	C	N	O	F	Ne
		Al	Si	P	S	Cl	Ar
11	12						
Cu	Zn	Ga	Ge	As	Se	Br	Kr
Ag	Cd	In	Sn	Sb	Te	I	Xe

•••

CONDUCTORS NORMALLY HAVE 1-3 ELECTRONS IN OUTERMOST SHELL

							18
							He
		13	14	15	16	17	
		B	C	N	O	F	Ne
		Al	Si	P	S	Cl	Ar
11	12						
Cu	Zn	Ga	Ge	As	Se	Br	Kr
Ag	Cd	In	Sn	Sb	Te	I	Xe

•••

SEMICONDUCTORS USUALLY HAVE 4 ELECTRONS IN OUTERMOST SHELL

							18
							He
		13	14	15	16	17	
		B	C	N	O	F	Ne
		Al	Si	P	S	Cl	Ar
11	12						
Cu	Zn	Ga	Ge	As	Se	Br	Kr
Ag	Cd	In	Sn	Sb	Te	I	Xe

•••

SEMICONDUCTOR MATERIALS ARE POOR CONDUCTORS/INSULATORS

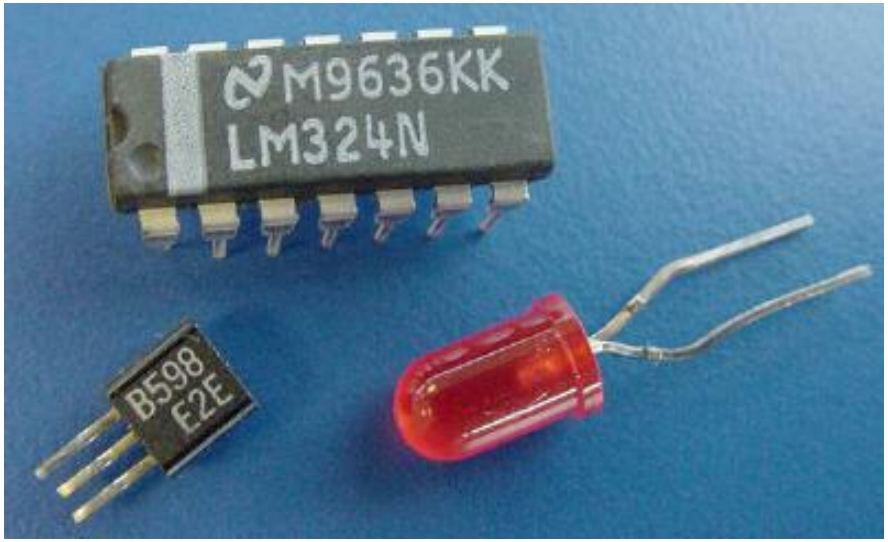

Image: http://www.howstuffworks.com/diode.htm

e.g. silicon (Si), germanium (Ge), and cadmium sulfide (CdS)

IN PURE SILICON CRYSTAL, EACH ATOM BONDS WITH FOUR OTHER ATOMS

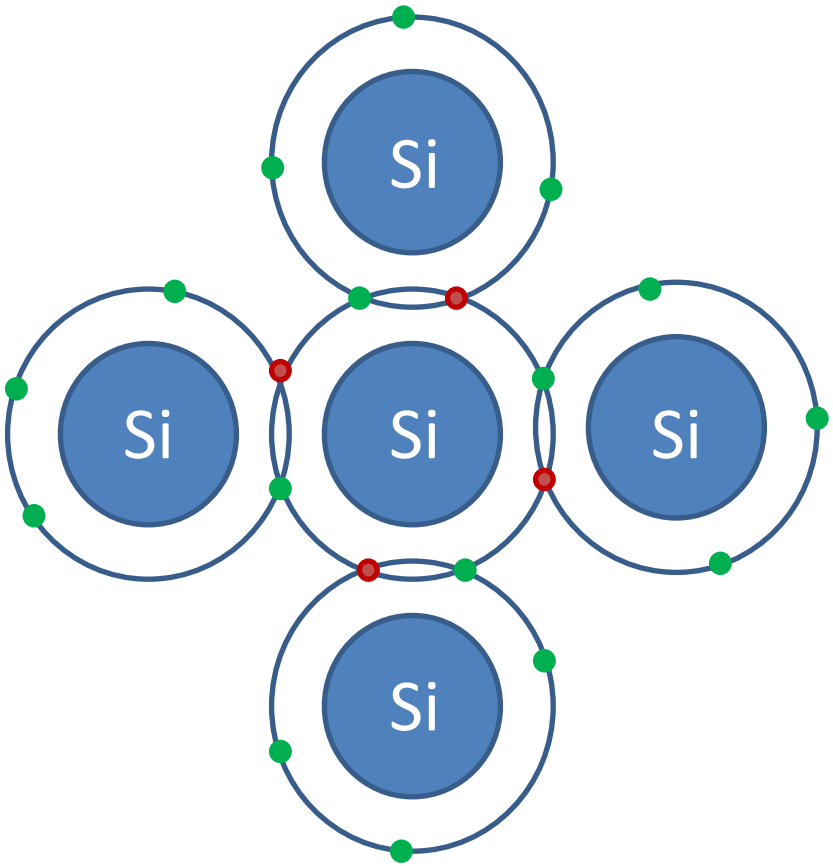

Full set of covalent bonds are created, leaving behind no excess or shortage of electrons.

ADDING ENERGY TO THE CRYSTAL CREATES A "HOLE"

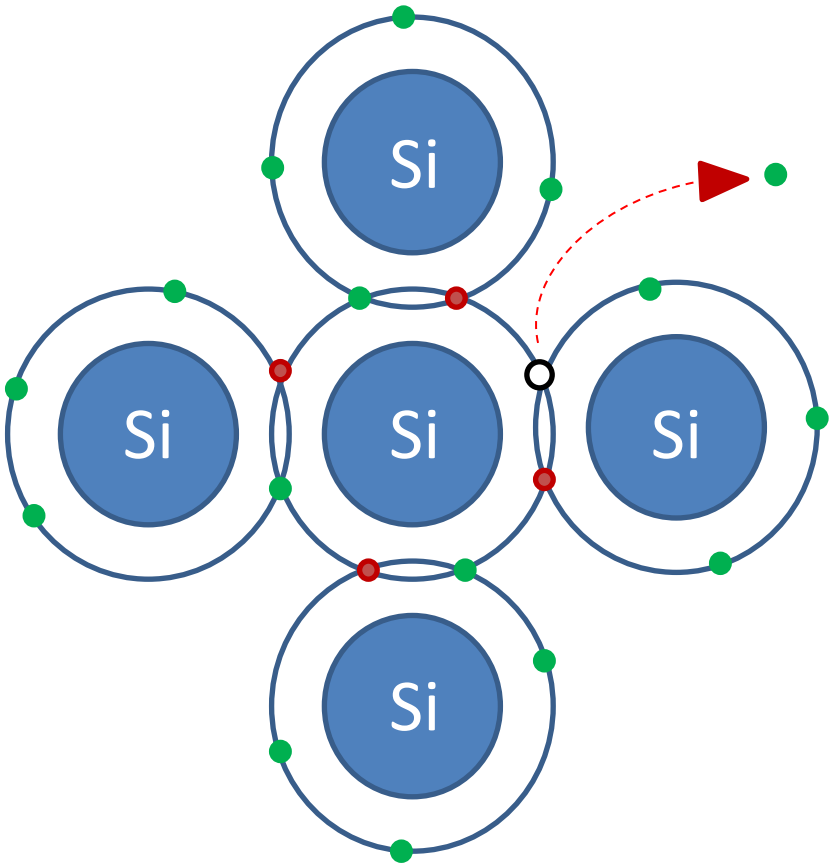

Adding energy (heat) to the crystal causes electrons to jump to a higher energy level, creating a "hole."

HOLES CAN BE VIEWED AS POSITIVE CHARGE CARRIERS

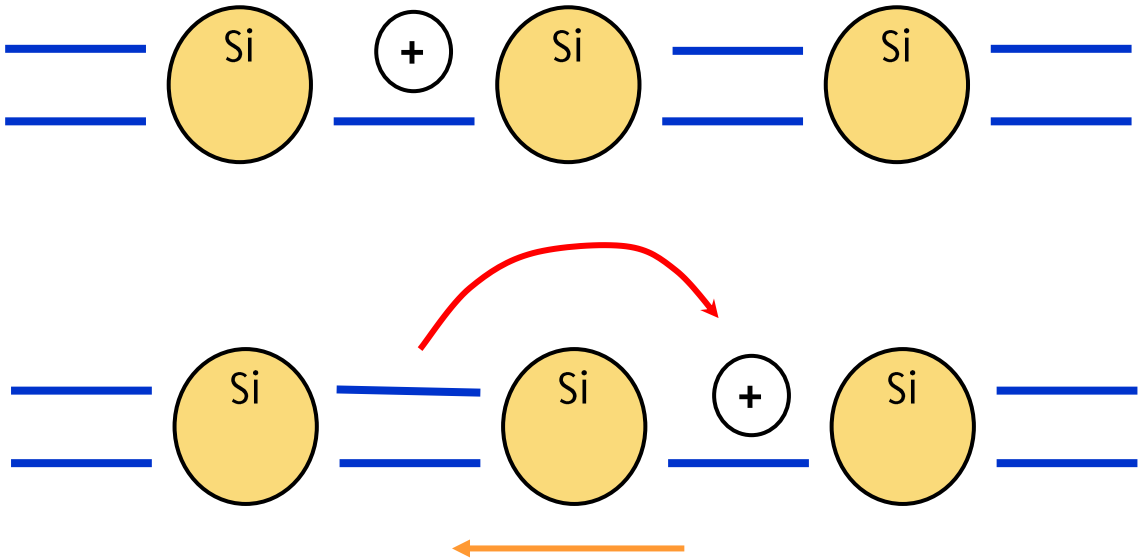

Net effect is electrons moving left, while holes move to the right

n-TYPE DOPING RESULTS IN A FREE ELECTRON

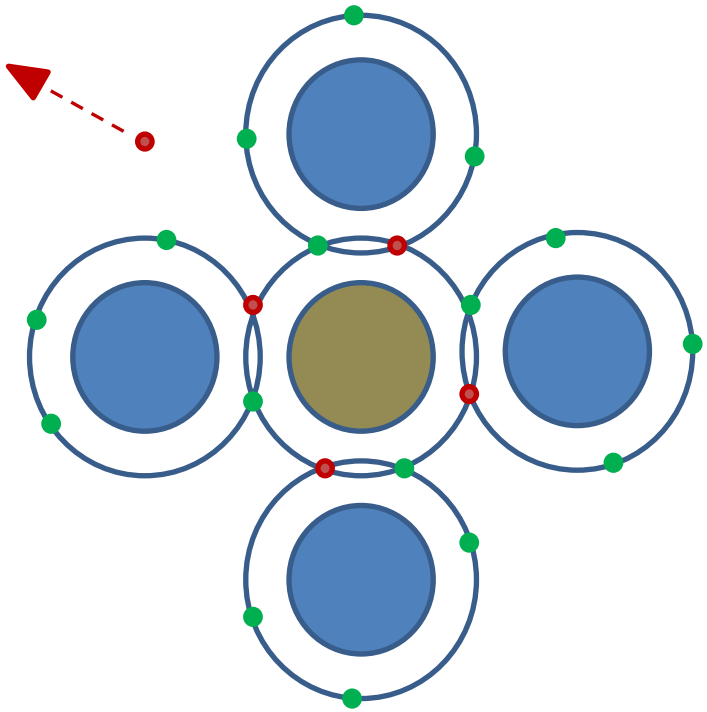

Silicon can be doped with donor elements (e.g. arsenic or phosphorus) having five electrons in their valence orbit. This frees an electron from the crystal lattice, thus producing an "n-type" semiconductor.

p-TYPE DOPING RESULTS IN AN OPEN HOLE

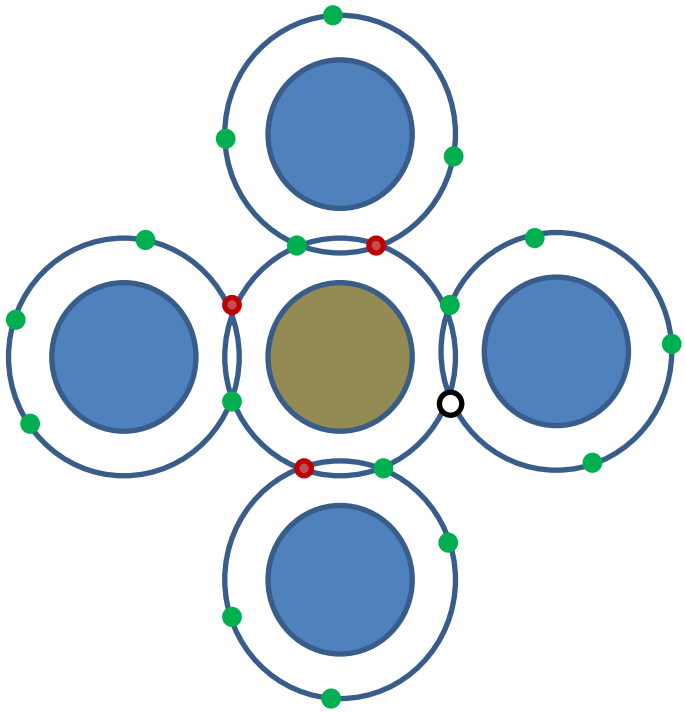

Silicon can be doped with acceptor elements (e.g. aluminum, boron, or gallium) that have 3 electrons in their valence orbit. This leaves a hole in the crystal structure, thus producing a "p-type" semiconductor.

JOINING p-TYPE AND n-TYPE MATERIALS FORMS A p-n JUNCTION

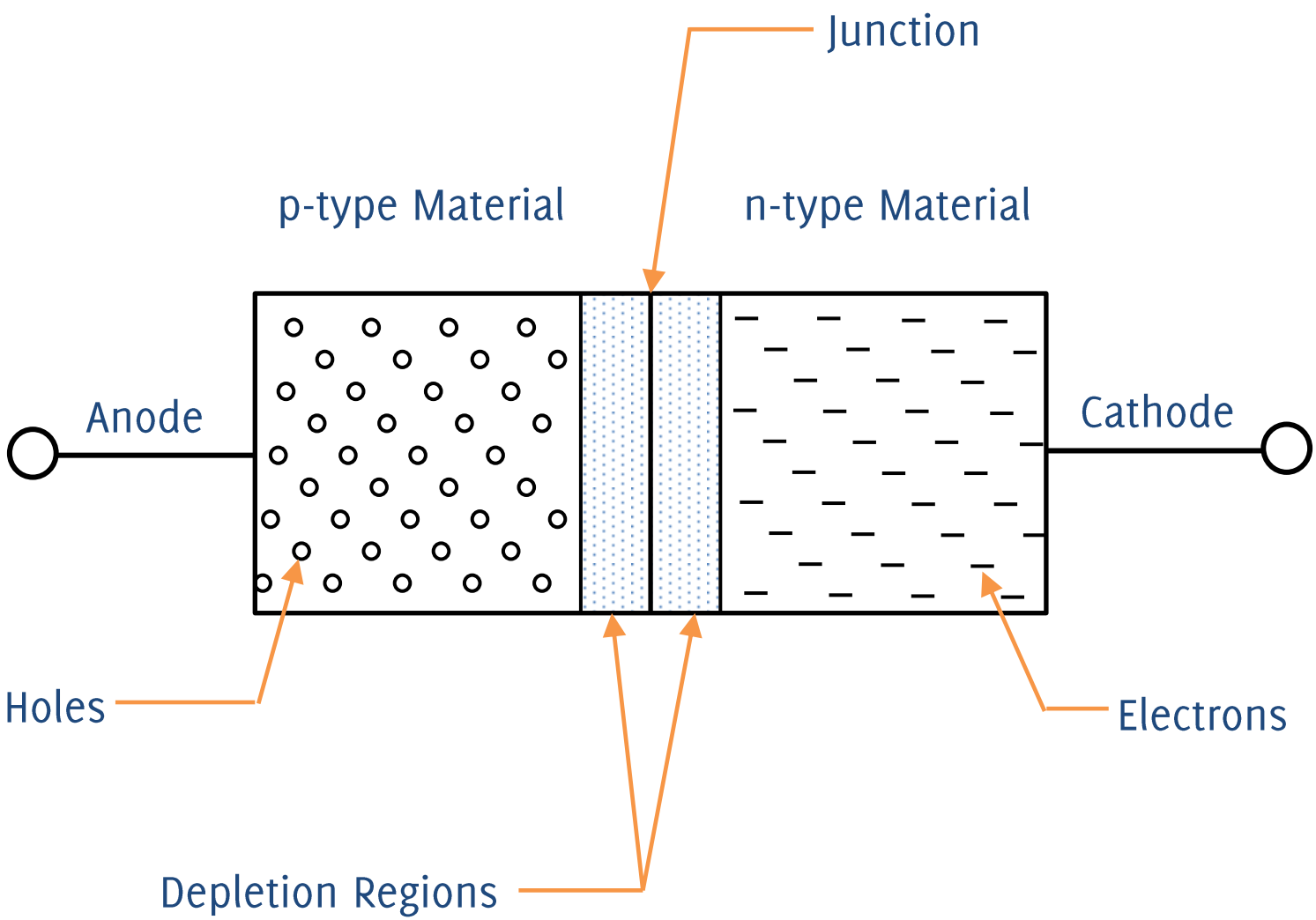

WE REFER TO A SINGLE p-n JUNCTION AS A DIODE

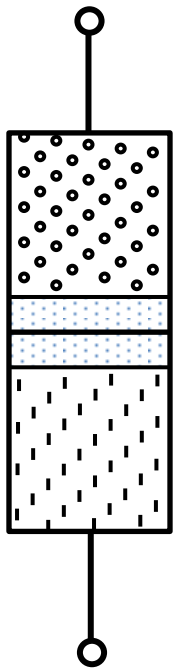

Diode Symbols:

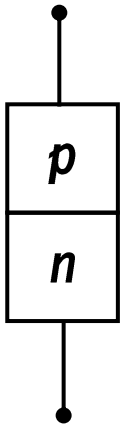

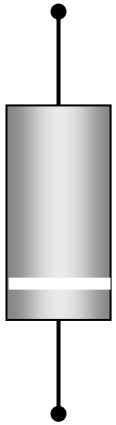

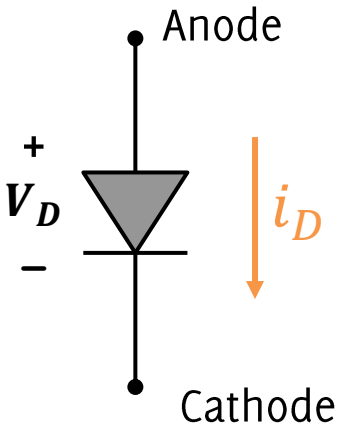

DIODES

Image: http://www.protostack.com/semiconductors/1n5404-general-purpose-400v-3a-rectifier-diode

Image: http://www.pedalpartsplus.com/mm5/graphics/00000001/Diode1n4148.jpg

A DIODE IS THE ELECTRONIC EQUIVALENT OF A CHECK VALVE:

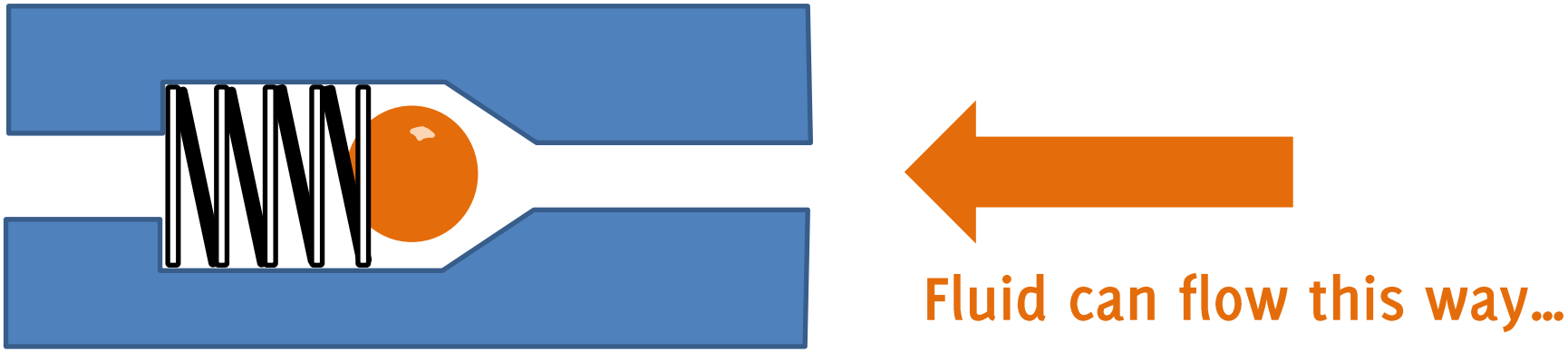

CHECK-VALVE ANALOGY IS REVEALED IN V-I GRAPH

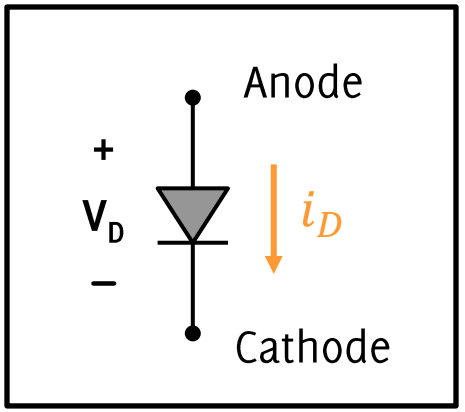

Forward Bias:

If $V_D > V_F$ (~ 0.6-0.7 V for Si)

⇒ Diode conducts (short circuit)

Reverse Bias:

If $V_Z < V_D < V_F$

⇒ Diode does not conduct (open circuit)

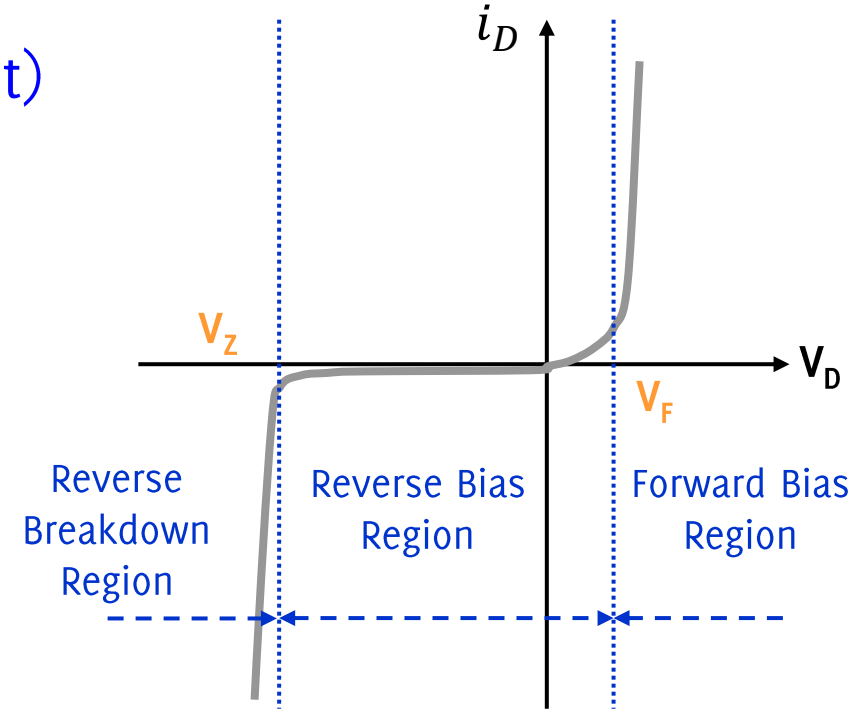

- If you exceed the breakdown voltage, you will likely destroy the diode!
- Breakdown voltage also known as "peak reverse" or "peak inverse" voltage

DIODES:
PRACTICAL CONSIDERATIONS

If the voltage across a diode is larger that V_F (i.e., forward biased), then the diode can be modeled as a short circuit in series with a V_F volt battery, e.g.

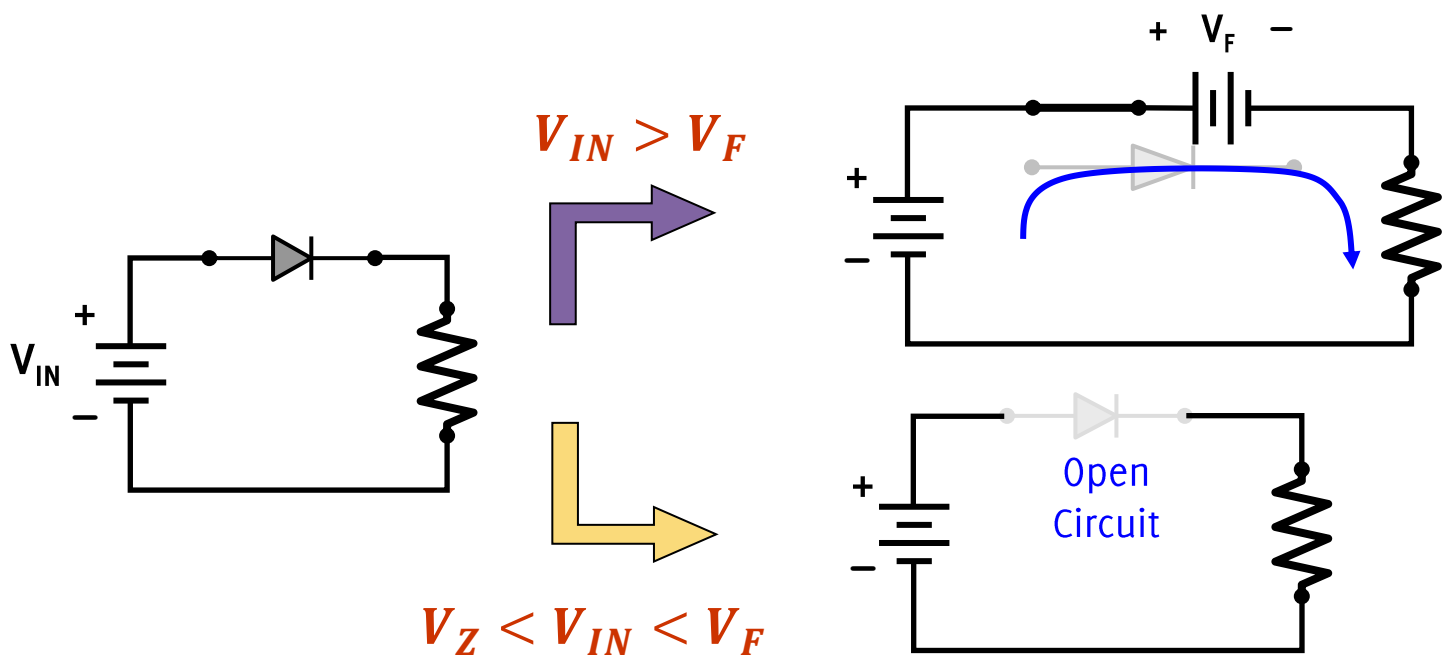

DIODES:
PRACTICAL CONSIDERATIONS

In addition to watching out for the maximum permissible reverse bias voltage, one has to ensure that the maximum allowable current (I_O) is not exceeded. Placing a *current limiting* resistor in series with the diode can alleviate this problem.

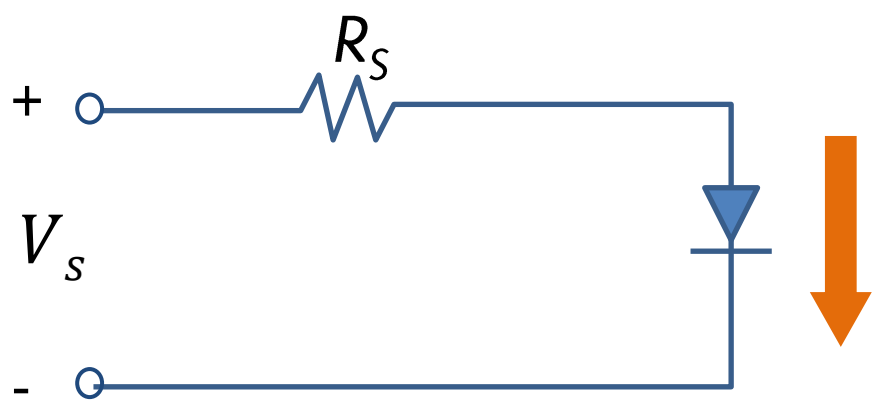

Current: $\dfrac{V_S - V_F}{R_S}$

DIODES:
PRACTICAL CONSIDERATIONS

VISHAY

www.vishay.com

1N4148

Vishay Semiconductors

ELECTRICAL CHARACTERISTICS (T_{amb} = 25 °C, unless otherwise specified)						
PARAMETER	**TEST CONDITION**	**SYMBOL**	**MIN.**	**TYP.**	**MAX.**	**UNIT**
Forward voltage	I_F = 10 mA	V_F			1	V
Reverse current	V_R = 20 V	I_R			25	nA
	V_R = 20 V, T_j = 150 °C	I_R			50	µA
	V_R = 75 V	I_R			5	µA
Breakdown voltage	I_R = 100 µA, t_p/T = 0.01, t_p = 0.3 ms	$V_{(BR)}$	100			V
Diode capacitance	V_R = 0 V, f = 1 MHz, V_{HF} = 50 mV	C_D			4	pF
Rectification effiency	V_{HF} = 2 V, f = 100 MHz	η_r	45			%
Reverse recovery time	$I_F = I_R$ = 10 mA, i_R = 1 mA	t_{rr}			8	ns
	I_F = 10 mA, V_R = 6 V, i_R = 0.1 x I_R, R_L = 100 Ω	t_{rr}			4	ns

http://www.vishay.com/docs/81857/1n4148.pdf

DIODES:
PRACTICAL CONSIDERATIONS

Datasheet for Vishay Semiconductor 1N4148 Diode

PARTS TABLE				
PART	ORDERING CODE	TYPE MARKING	INTERNAL CONSTRUCTION	REMARKS
1N4148	1N4148-TAP or 1N4148TR	V4148	Single diode	Tape and reel/ammopack

ABSOLUTE MAXIMUM RATINGS (T_{amb} = 25 °C, unless otherwise specified)				
PARAMETER	TEST CONDITION	SYMBOL	VALUE	UNIT
Repetitive peak reverse voltage		V_{RRM}	100	V
Reverse voltage		V_R	75	V
Peak forward surge current	t_p = 1 µs	I_{FSM}	2	A
Repetitive peak forward current		I_{FRM}	500	mA
Forward continuous current		I_F	300	mA
Average forward current	V_R = 0	$I_{F(AV)}$	150	mA
Power dissipation	l = 4 mm, T_L = 45 °C	P_{tot}	440	mW
	l = 4 mm, $T_L \leq$ 25 °C	P_{tot}	500	mW

THERMAL CHARACTERISTICS (T_{amb} = 25 °C, unless otherwise specified)				
PARAMETER	TEST CONDITION	SYMBOL	VALUE	UNIT
Thermal resistance junction to ambient air	l = 4 mm, T_L = constant	R_{thJA}	350	K/W
Junction temperature		T_j	175	°C
Storage temperature range		T_{stg}	- 65 to + 150	°C

WHY DO WE NEED DIODES?

- Signal processing
  - Rectification
  - Clipping
  - Peak detection
- Voltage regulation (Zener diode)
- Signal indication (LED)
- System isolation (LED + photodiode)

DIODE APPLICATION: RECTIFICATION

Rectification of AC Signals

- Half-wave rectifier

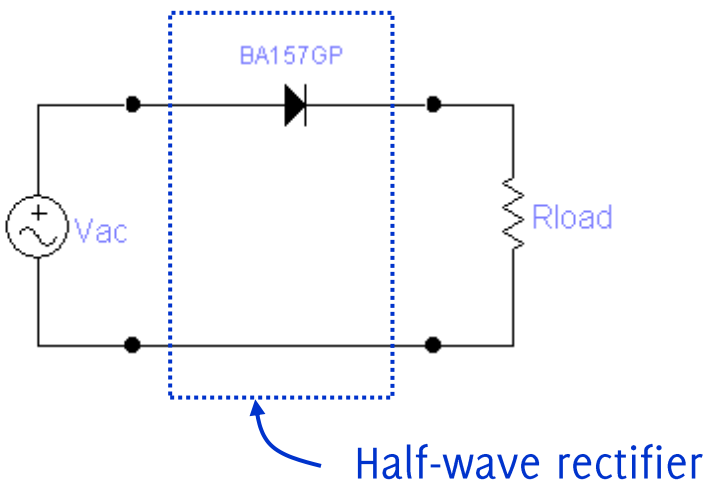

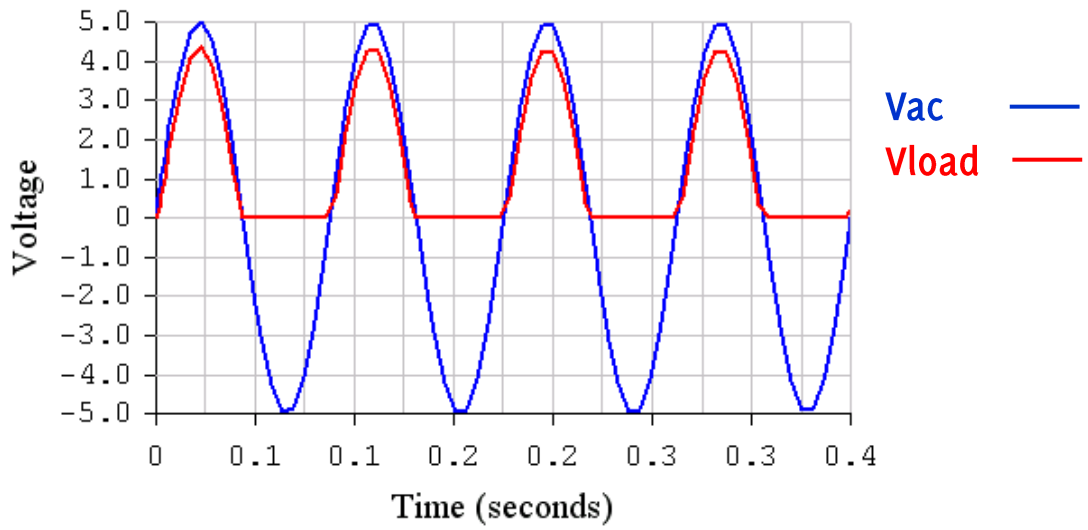

DIODE APPLICATION: RECTIFICATION

Rectification of AC Signals

- Bridge rectifier

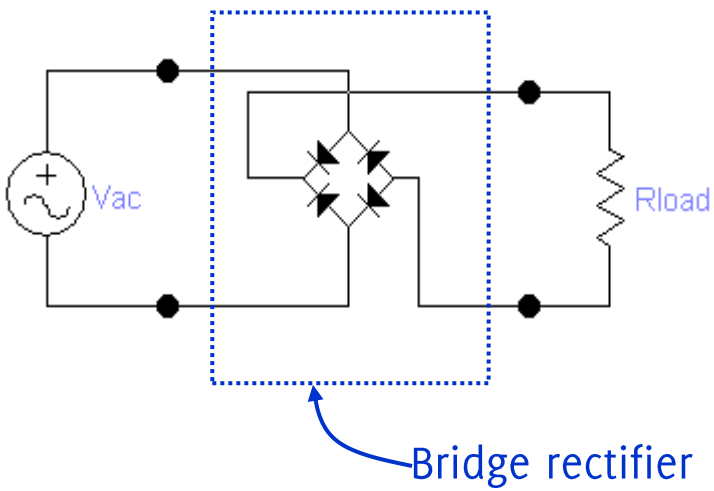

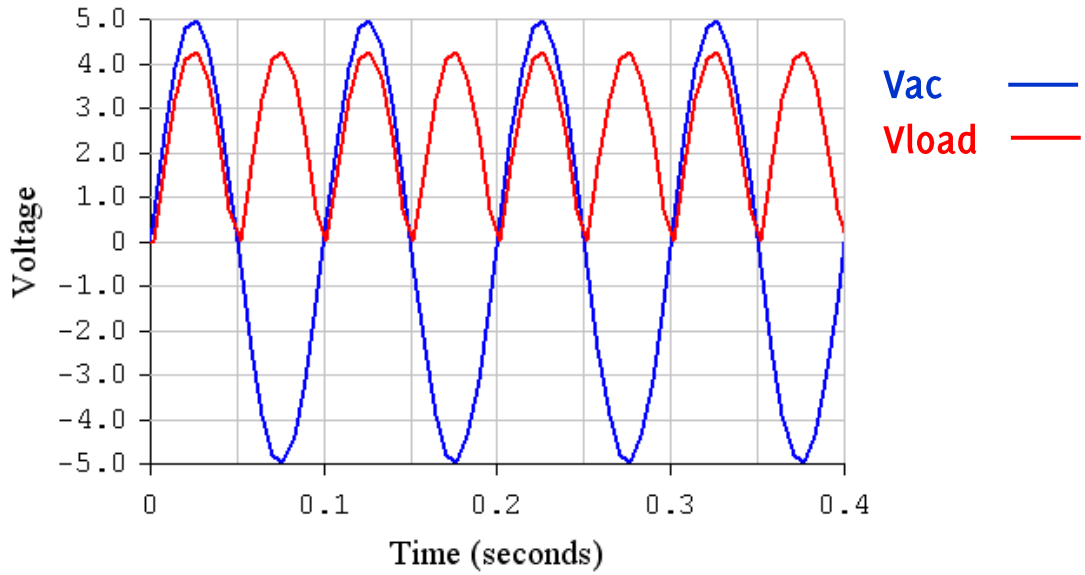

DIODE APPLICATION: RECTIFICATION

VISHAY

KBL005, KBL01B, KBL02, KBBL04, KBL06, KBL08, KBL10

www.vishay.com

Vishay General Semiconductor

Single-Phase Bridge Rectifier

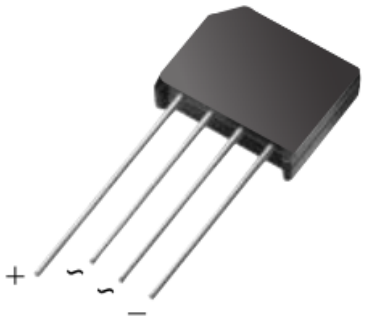

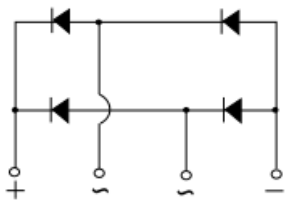

Case Style KBL

PRIMARY CHARACTERISTICS	
Package	KBL
$I_{F(AV)}$	4 A
V_{RRM}	50 V, 100, V, 200 V, 400 V, 600 V, 800 V, 1000 V
I_{FSM}	200 A
I_R	5 μA
V_F at I_F = 4 A	1.1 V
T_J max.	150 °C
Diode variations	In-Line

FEATURES

- UL recognition, file number E54214
- Ideal for printed circuit boards
- High surge current capability
- High case dielectric strength of 1500 V_{RMS}
- Solder dip 275 °C max. 10 s, per JESD 22-B106
- Material categorization: For definitions of compliance please see www.vishay.com/doc?99912

Pb

e4

RoHS COMPLIANT

TYPICAL APPLICATIONS

General purpose use in AC/DC bridge full wave rectification for monitor, TV, printer, SMPS, adapter, audio equipment, and home appliances applications.

MECHANICAL DATA

Case: KBL

Molding compound meets UL 94 V-0 flammability rating Base P/N-E4 - RoHS-compliant, commercial grade

Terminals: Silver plated leads, solderable per J-STD-002 and JESD22-B102

Polarity: As marked on body

Mounting Torque: 10 cm-kg (8.8 inches-lbs) max.

Recommended Torque: 5.7 cm-kg (5 inches-lbs)

DIODE APPLICATION: DC POWER SUPPLY

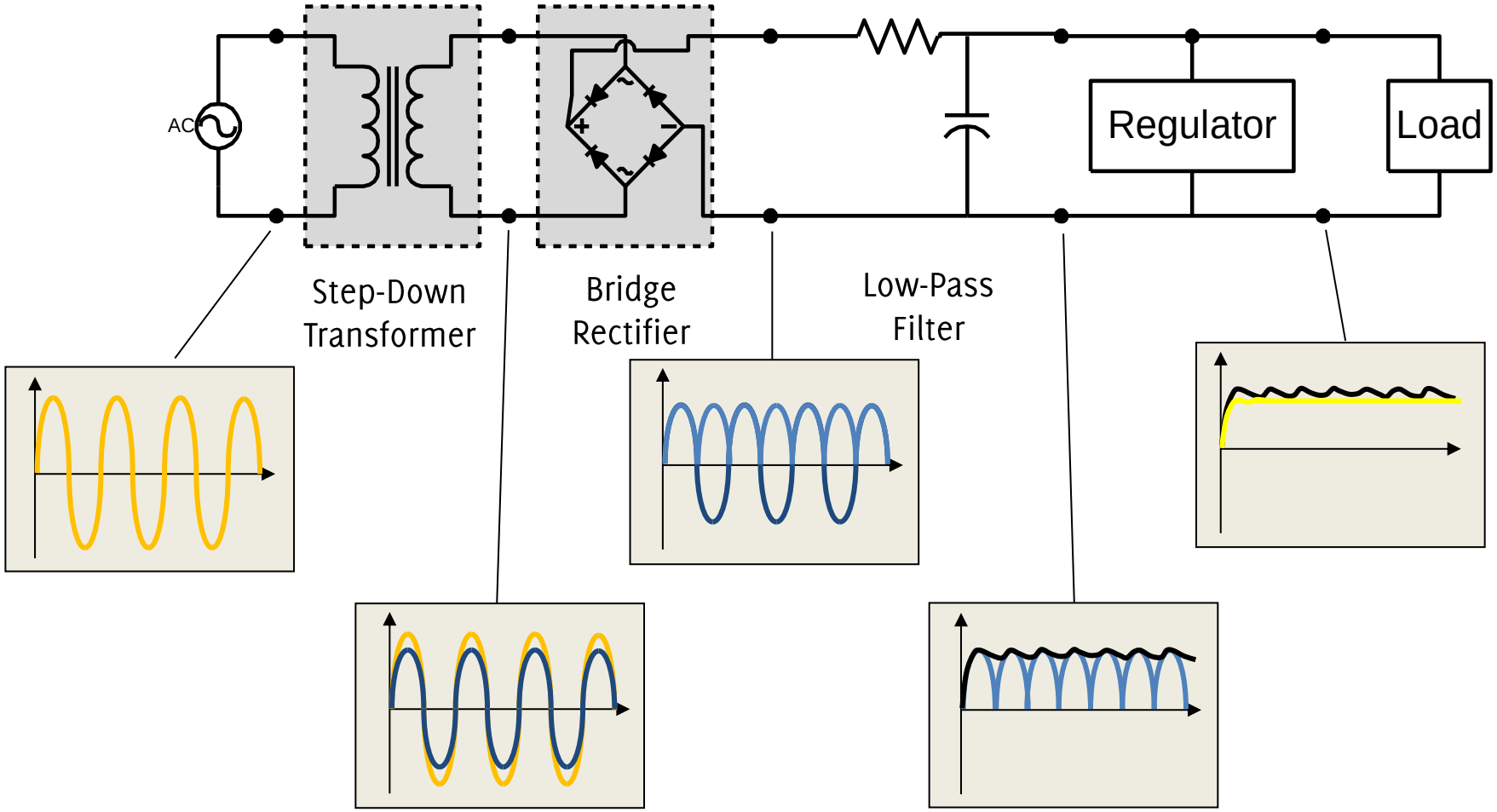

DIODES CAN BE USED TO CLIP A SIGNAL AT SPECIFIED LIMITS

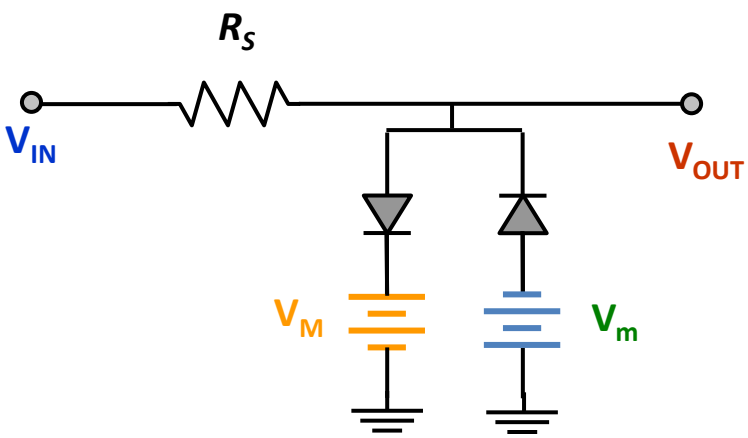

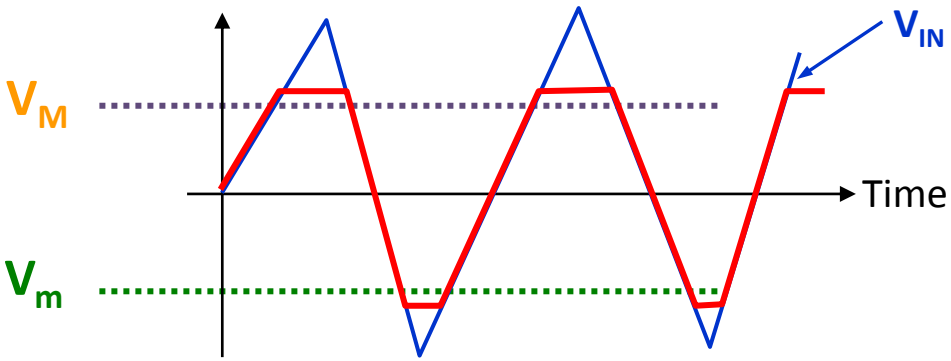

Where might you use this?

A DIODE WITH A CAPACITOR CAN BE USED AS A PEAK DETECTOR

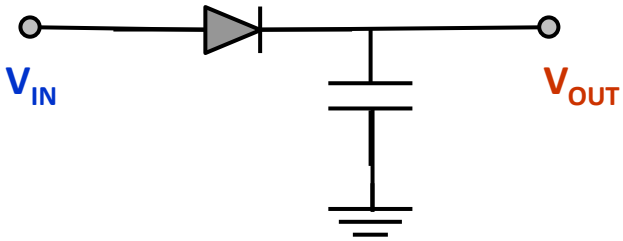

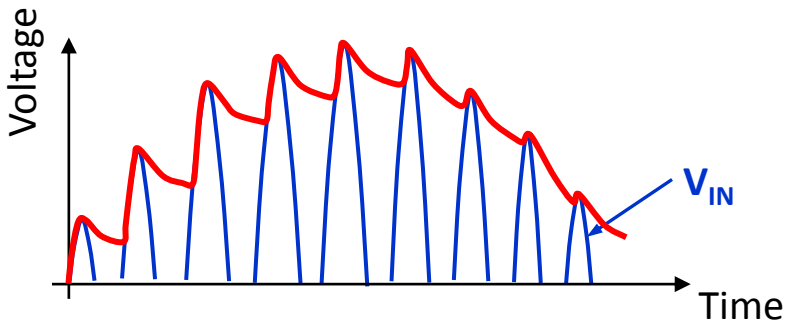

Where might you use this?

ZENER DIODES OPERATE IN THE REVERSE BREAKDOWN REGION

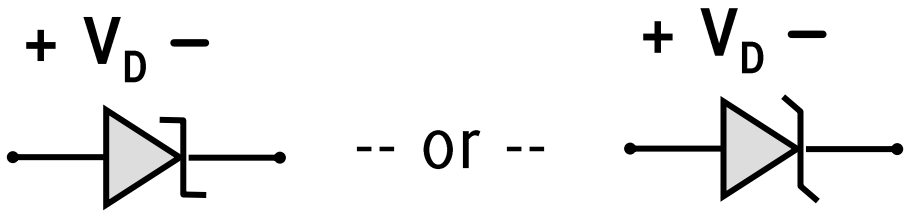

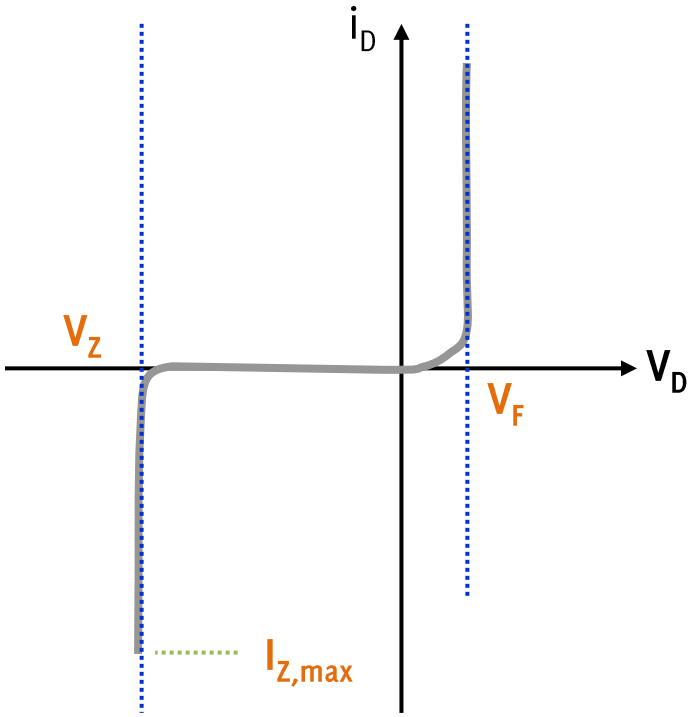

- Steep breakdown curve with well defined breakdown voltage V_Z
- Can maintain nearly constant voltage for a wide range of currents

ZENER DIODE MODELED AS HAVING TWO PARALLEL BRANCHES:

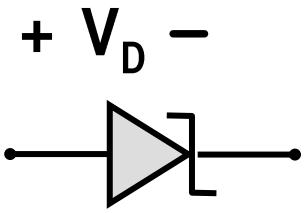

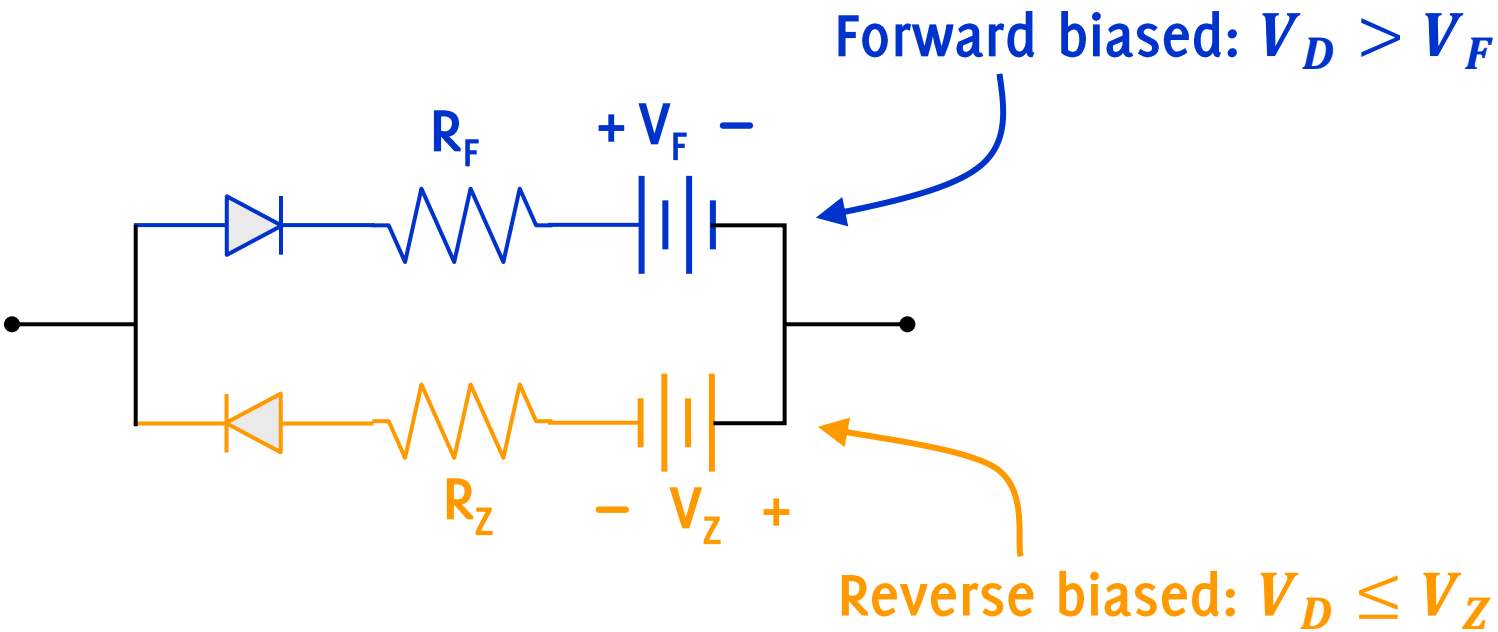

ZENER DIODE APPLICATION: VOLTAGE REGULATOR

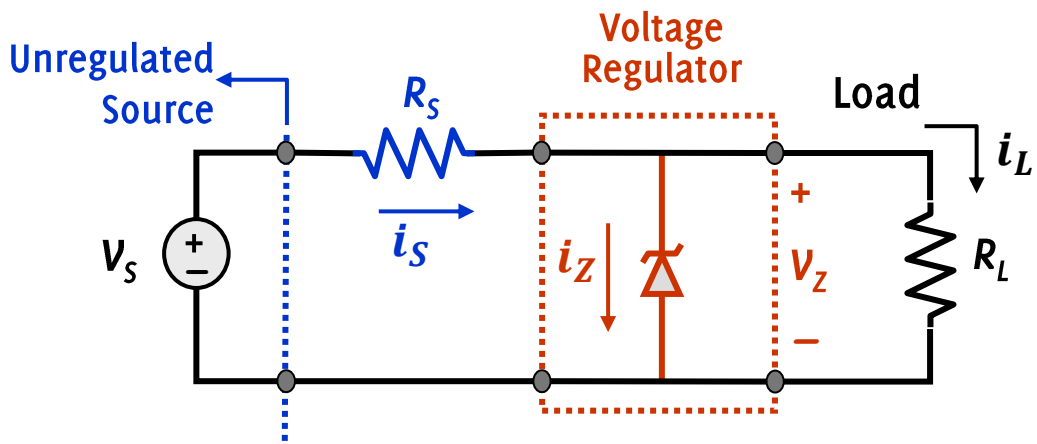

- Load voltage equals V_Z if the Zener diode is in the reverse breakdown region: $i_L = \frac{V_Z}{R_L}$
- Load current comes from KCL: $i_L = i_S - i_Z$
- Source current is: $i_S = \frac{V_S - V_Z}{R_S}$
- Zener diode is usually rated by its maximum allowable power dissipation: $P_{Z,max} = i_{Z,max} \cdot V_Z$

⇒ **Need to make sure that i_Z will not become too large**

VOLTAGE REGULATION: PRACTICAL CONSIDERATION

IC Voltage Regulator:

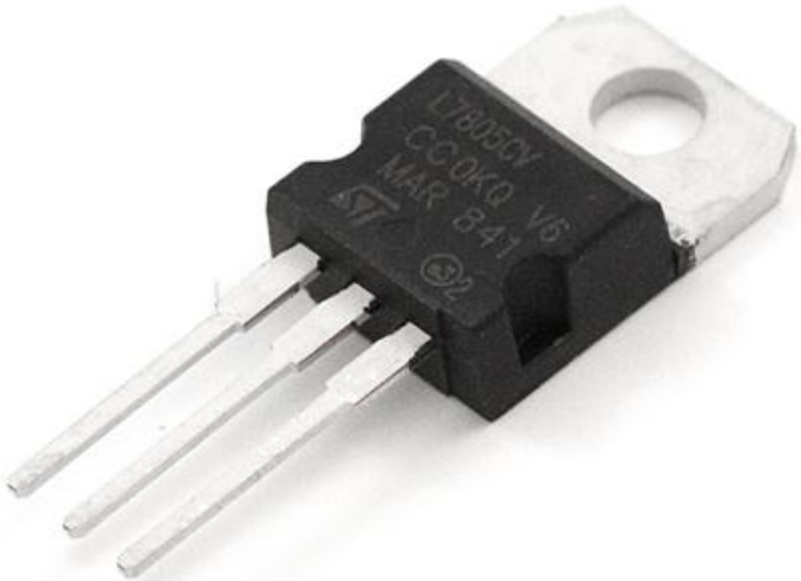

Image: https://www.sparkfun.com/products/107

VOLTAGE REGULATION: PRACTICAL CONSIDERATION

- Zener regulators are usually smaller, cheaper, and easier to implement, and are suitable for low power voltage regulation.
- IC voltage regulators are generally more efficient, especially for widely varying current loads, and at higher power levels.
- Zener diode performance varies with temperature, while IC voltage regulators are compensated for thermal variations.
- Since the zener diode splits current with the load, the voltage drop across the zener diode can be influenced by the load current. In comparison, an IC voltage regulator is designed to draw a nearly constant bias current, regardless of fluctuations in load voltage and current.

LIGHT-EMITTING DIODES (LEDs)

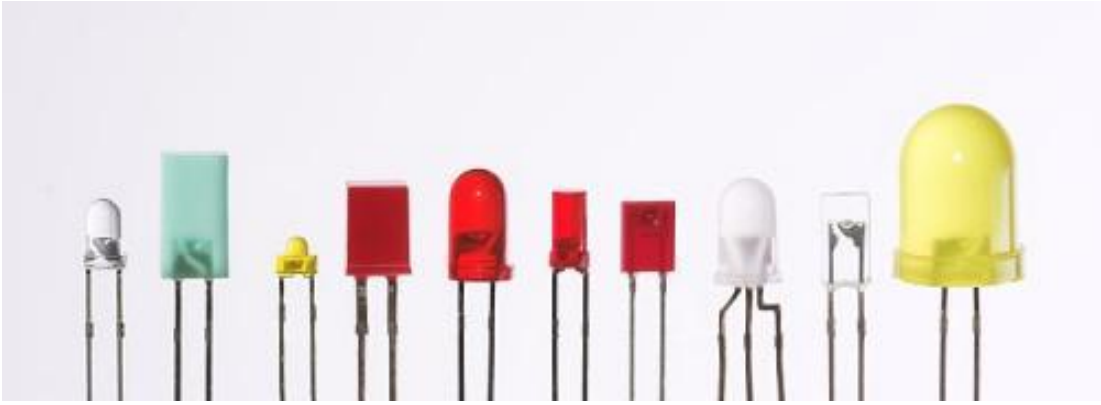

Image: http://www.eeweb.com/blog/andrew_carter/facts-about-light-emitting-diodes-led

LEDS EMIT PHOTONS WHEN FORWARD BIASED

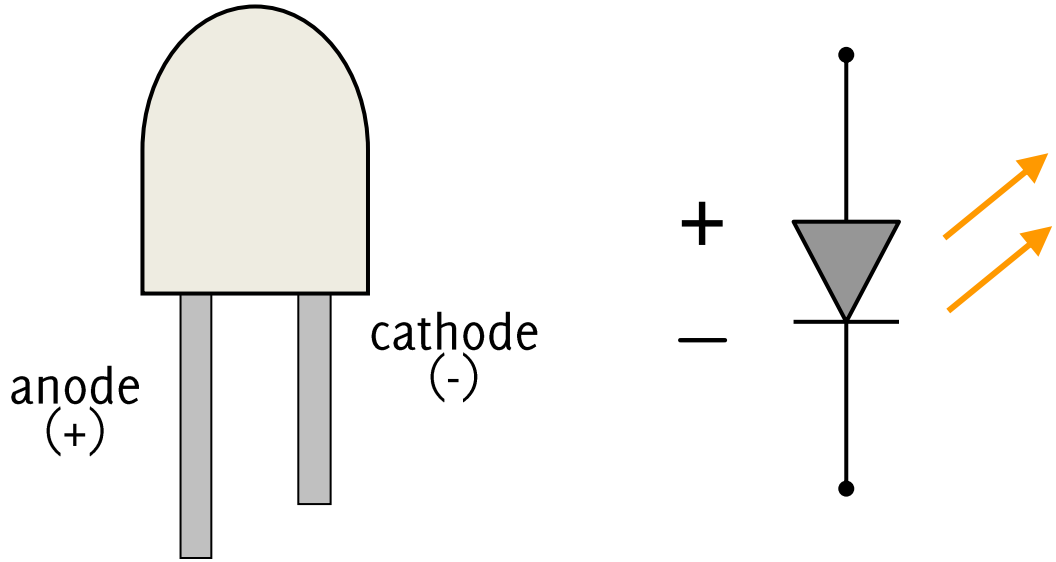

Light intensity is related to the amount of current flowing through the diode.

LEDS CAN BE USED TO INDICATE A SIGNAL VALUE

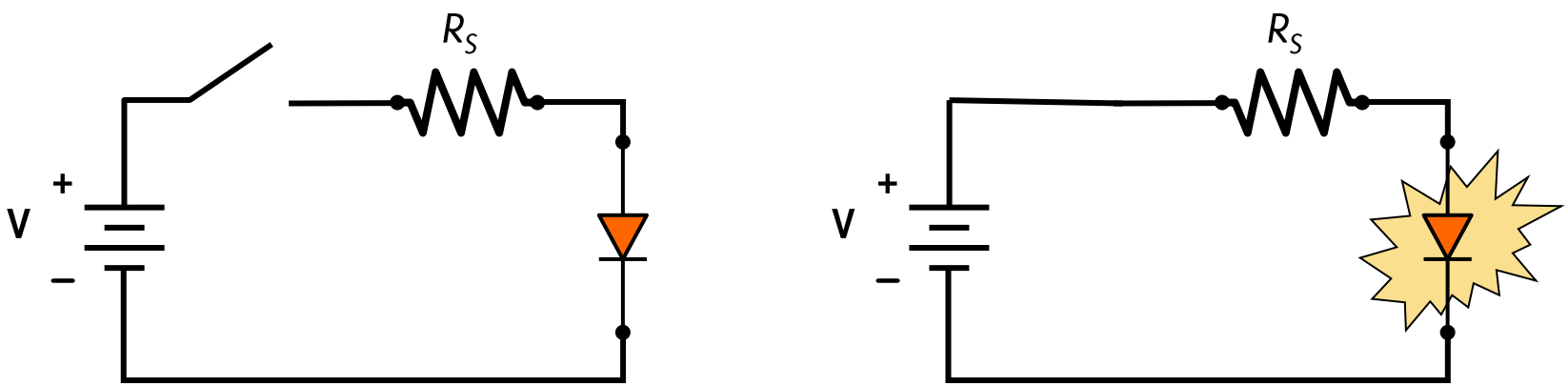

LEDs exhibit a voltage drop of 1.5 to 2.5 volts when forward biased

A series current-limiting resistor (~330Ω for a 5 volt source) is needed to prevent excess forward current

PHOTODIODES

Image: http://www.pacer-usa.com/Assets/Pacer/User/Photodiodes.jpg

PHOTODIODES ARE LIGHT-SENSITIVE p-n JUNCTIONS

Optimized to generate reverse (leakage) current in the presence of light. As the light intensity increases, additional electrons are kicked into the conduction band, allowing for greater current flow.

A photodiode can be used as a light sensor.

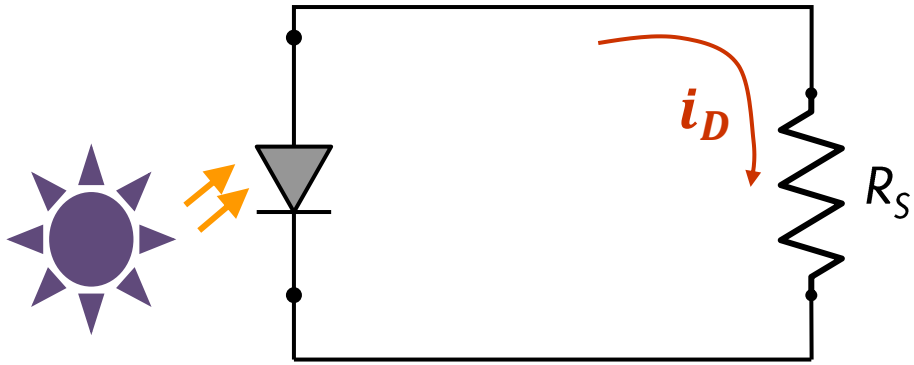

LED/PHOTODIODE PAIRING MAKES AN OPTOCOUPLER

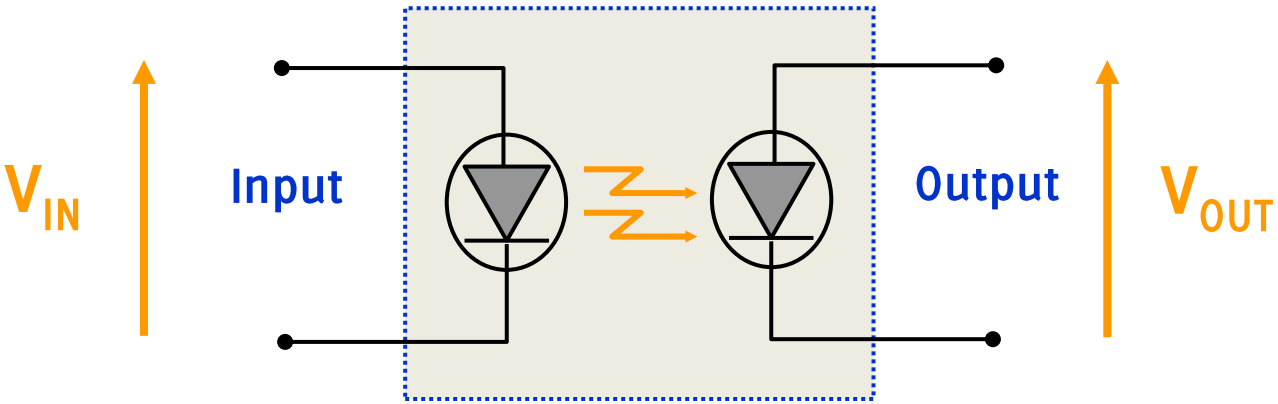

Image: https://tronixstuff.wordpress.com/2010/09/21/education-introduction-to-the-optocoupler/

- Couples two circuits while maintaining electronic isolation
- Extremely useful when connecting high-power circuits to low-power control circuits
- Not suited for analog signals

SCHOTTKY DIODES ALLOW FOR FASTER SWITCHING

At high frequencies (> 1MHz), ordinary diodes cannot shut off quick enough to avoid noticeable current. This is corrected by a Schottky diode, which uses a precious metal on one side of the *p-n* junction, and doped silicon on the other.

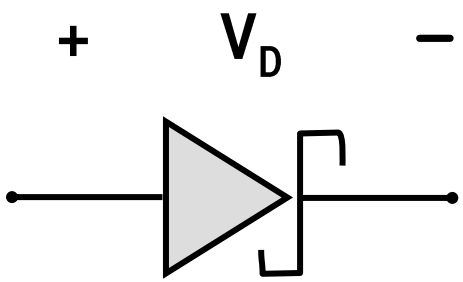

COMING UP…

Electronic Systems

- Switching and amplifying with transistors
- Interfacing active electronic components

Computer Systems

- Why do Computer Systems matter?
- Combinational logic
- Sequential logic
- Finite state machines

ACTION ITEMS

1. First lab report due: Thursday 1/22 or Friday 1/23, by 5 pm