CHPB-34-2019: Packaged Propane Heat Pumps with Secondary Loops and Variable-Temperature Metal-Hydride Energy Storage

Objective:

Evaluate the effectiveness of using variable activation temperature energy storage in packaged propane heat pumps

Problem

Conventional phase change materials have a fixed melting point limiting their applicability with seasonal variations in heating/cooling loads.

Expected Results / Impact:

- Design of algorithm to determine appropriate variable activation temperature for enhancing heat pump system performance in particular climates
- System design for secondary loop including metal-hydride energy storage
- Assessment of benefits (e.g., economic) of variable-temperature thermal storage for heat pump systems

Approach:

- Evaluate variable-temperature energy storage technology with a system model-based performance evaluation
- Model a metal hydride thermal storage system and evaluate performance with respect to payback period over heating and cooling seasons and across different climates

Schedule

Q1: System Model Development

Q2: Performance Evaluation w/ Arbitrary Energy Storage System and Modeling of Metal Hydride (MH) System

Q3: Integration of MH System into System Models

Q4: Performance Evaluation w/ MH System

CHPB CENTER FOR HIGH PERFORMANCE BUILDINGS AT PURDUE

Packaged Propane Heat Pumps with Secondary Loops and Variable-Temperature Metal-Hydride Energy Storage

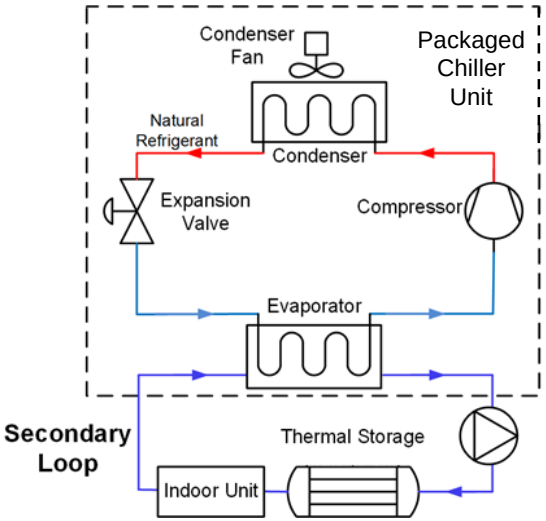

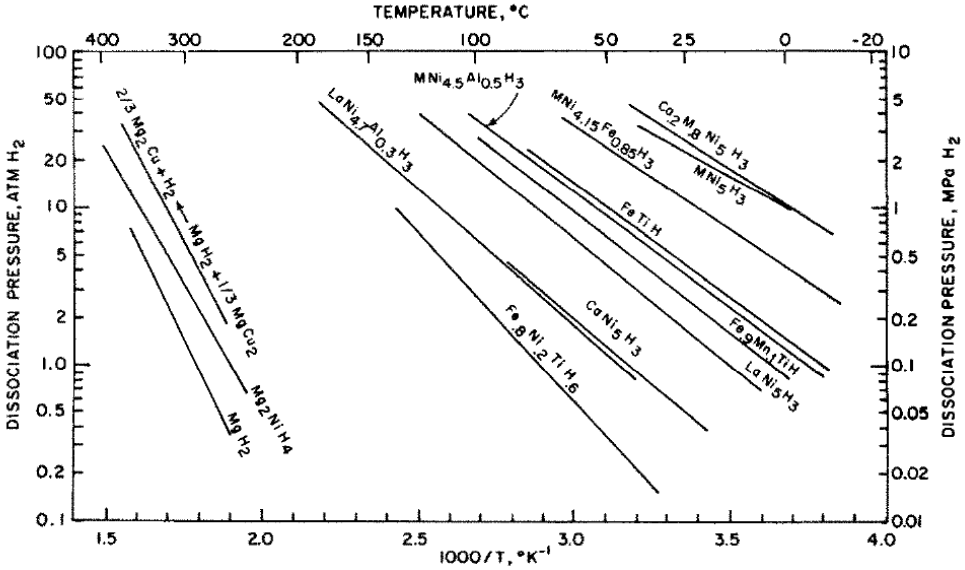

Hydriding temperature is related to the pressure

Packaged Chiller w/ Thermal Storage: 1) Reduce refrigerant leakage (faculty sealed); 2) Easier & cheaper to install than split residential system (water/glycol connections rather than refrigerant: 3) Downsizing of chiller because of thermal storage (reduces cooling equip. cost & refrig. charge); 4) Couples to renewable energy as a “thermal battery” (alternative to electrical batteries); 5) Leverage utility rate incentives for cost savings

CENTER FOR HIGH PERFORMANCE BUILDINGS AT PURDUE